bamar

2020

INDEX

Boom furling units
- BFBM (A80) hydraulic o electric motorization for furling booms 4
- BFBMM (A87) manual boom furling device 6

Foresail Furlers
- GFM (B13) - (B15) manual foresail furler 8
- GFI (B57) hydraulic foresail furler 10
- EJF (B46) electric foresail furler 12
- GFSI (B79) - GFSE (B28) “flush-deck” hydraulic or electric foresail furlers for fixed stays 14
- GFSI CTS (B74) “flush-deck” hydraulic foresail furler for torsional stays 16
- SIT (C32) & SET (C31) “flush-deck” hydraulic or electric furler with cylinder for removable stays 18
- Foil (B82) with expanding openable connector 20
- “OPEN” high load halyard swivel (B80) 22

RLG-CODE
- RLG EVO (C11) - (C60) furling system for Gennakers 24
- ROLLGEN STAY KIT (C64) special stay for RLG EVO 26
- RLG EVO S (C11) - (C60) furling system for structural stays 28
- Optional EVO 30
- Backstay Block (O90) bs.s. standing wire pulley 34
- Boards (C90) for single cable stay and strops 34
- Low friction rings (C90) 34
- BWSE (C40) electric furler for bowsprit 36
- BWSI (C40) hydraulic furler for bowsprit 36
- PE (C35) electric furling pad eye 38
- PI (C36) hydraulic furling pad eye 38
- RLG-CODE MEJ (C20) electric furler 40
- RLG-CODE GFI (C21) hydraulic furler 40
- RLG-CODE SE (C23) CODE SE (C24) electric furler with spherical connection 42
- RLG-CODE SI (C30) hydraulic furler with spherical connection 42

Hydraulic cylinders
- Hydraulic cylinder (E20) - (E21) - (E22) 44
- Cylinder accessories (E90) - (E93) 44
- Hydraulic boom vang (E19) 46
- BPC-TRIM (E02) hydraulic cylinder with tackle 48
- BSCP (E03) cylinder with spherical fulcrum 50
- BSCT (E04) hydraulic stay tensioning cylinder with spherical fulcrum 52
- BCPO (E07) hydraulic outhaul cylinder 54
- BCBM (E30) hydraulic cylinder with mechanical lock 54
- BHP (E10) single function or multifunction hydraulic panel 56
- Quick Release (E96) pressure release switch 58

Deck Equipment
- Vang (G10) kicker with mechanical spring 58
- BTM (F10) mechanical stay adjuster 60
- BTV (F10) handwheel mechanical stay adjuster 60

Mainsail Furlers
- RGEM (A10) manual external mainsail furler 62
- RGEEL (A12) electric external mainsail furler 64
- RGIM (A20) manual in-mast mainsail furler 66
- RGIEL (A22) electric in-mast mainsail furler 68
- RGI (A60) - RGEL (A50) TBI (A61) - TBEL (A51) “combined” mainsail motorization and outhaul 70

Captive Winches
- Electric and Hydraulic Captive Winches with line front output (P31) - (P01) 72
- Electric and Hydraulic captive winches with line side output (P31) - (P01) 74

Quality 78

Bamar Facilities

BFBM (A80)

hydraulic o electric motorization for furling booms

Electric motorizations for furling booms available for sailing yachts with indicative boom length from 6 to 25 metres. The system is made up by a reduction gear and an electric motor with its brake (to lock the device when reefing), integrated and protected inside a cylindrical structure designed to be housed inside the mainsail furling mandrel. Should the boom-maker supply a manual locking device (part of the boom construction), then the electro-magnetic brake is not required. The motorization external body is in polished stainless steel, and is supplied with slots where the mainsail tack is to be tied on.
The standard motorization (A) may be equipped with either a simple boom toggle (B), or alternatively, with the special boom toggle (C) that integrates the manual emergency clutch.

N.B.: both toggles are optional and are to be requested when placing the order.
Upon demand, we may supply the drilling template (D) for the mandrel.

Being compact, light in weight, easy to install and thanks to its position mast-side of the boom, our electric motorization represents a unique solution in its field. Moreover, among the systems on the market, this Bamar furler is the one that allows for the minimum distance between aft-face of the mast and sail tack. This makes the sail opening and closing easier.

Sizes 140, 182, 280 and 360 may also be hydraulically motorized.

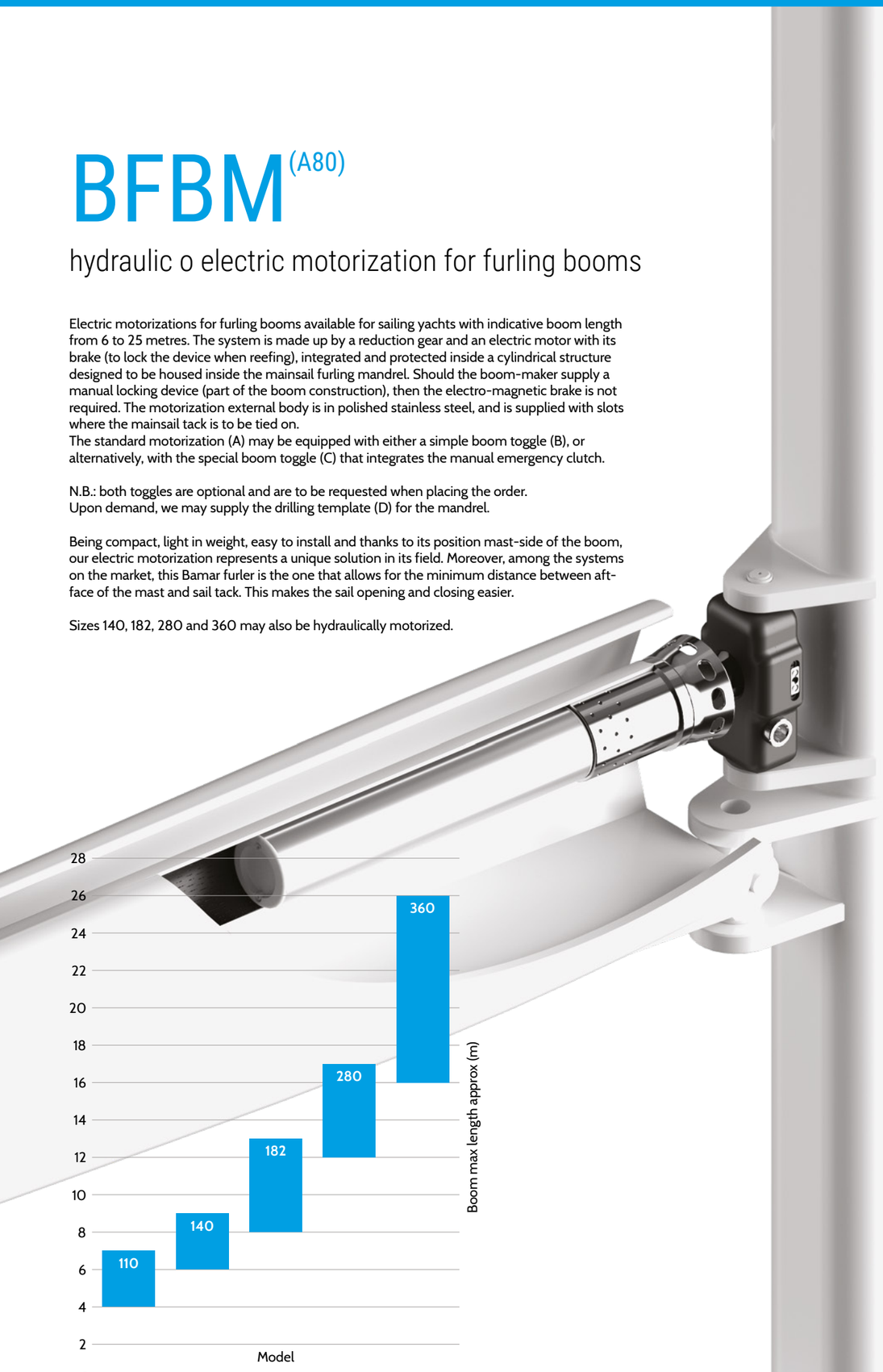

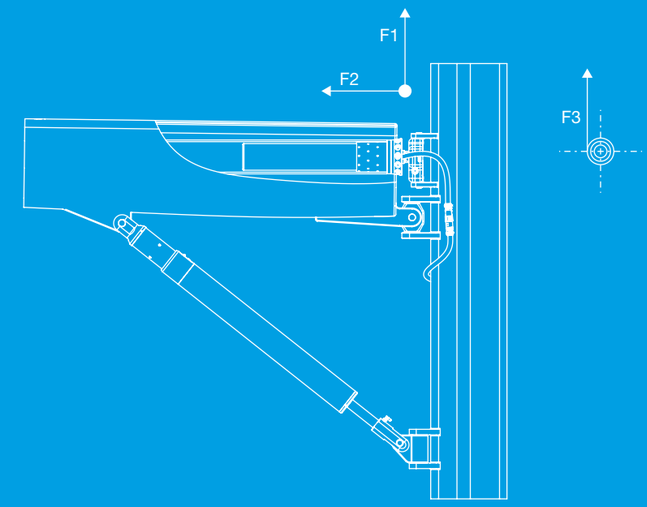

Mandrel External Ø mm		110	140	182	280	360
Boom max length (indicative not binding) m		6	8	12	16 - 17	22 - 25
F1 Vertical Pull max WL* t		1,5	2,5	6	15 - 20	30
F2 Horizontal Pull max WL* t		1	2	4	10	20
F3 Reefed Sail Vertical max WL** t		1,5	2,5	6	15 - 20	30
Electric	Volt	12 - 24	12 - 24	24 - 220 / 400	220 / 400	220 / 400
	Motor Power W	400	600	1500 - 2000	3000 - 4000	4000 - 5500
	Speed Max rpm	15	15	15	TBC	TBC
	Weight kg	18	31	43	230	390
Hydraulic	Int. pressure drop Bar	-	140	140	-	-
	Oil flow L/min	-	12,5	25	-	-
	Furler speed rpm	-	13,5	18	-	-
	Weight kg	-	27	55	-	-

*with sail fully open

** calculated on an intermediate Ø

160 mm on mandrel Ø 110
200 mm on mandrel Ø 140
260 mm on mandrel Ø 182

400 mm on mandrel Ø 280
550 mm on mandrel Ø 360

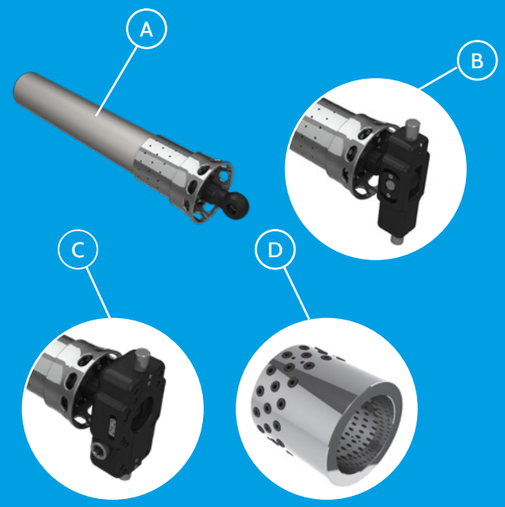

BFBMM (A87)

manual boom furling device

Bamar BFBMM is a new and innovative line of manual mainsail furling mechanisms to be installed on furling booms manufactured by any boom maker.
The unit has a cylindrical shape, designed to be housed inside the mainsail furling mandrel. It is controlled by an endless line which operates a furling pulley equipped with an easy handling manual mechanical lock to allow you keep reefing positions.
The kit may be completed by an optional boom toggle.
The series is available in two sizes:

- 110 for mandrels with external Ø 110 mm – max boom E length 6 m approx
- 140 for mandrels with external Ø 140 mm – max boom E length 8 m approx

Electric upgrade with Bamar BFBME motorizations is possible. You will be able to keep same mandrel and toggle, and install the equivalent motorized version.

Bamar BFBMM is not only compact and easy to install, but it also allows for the minimum distance between aft-face of the mast and sail tack. This makes sail hoisting and furling in easier and neater.

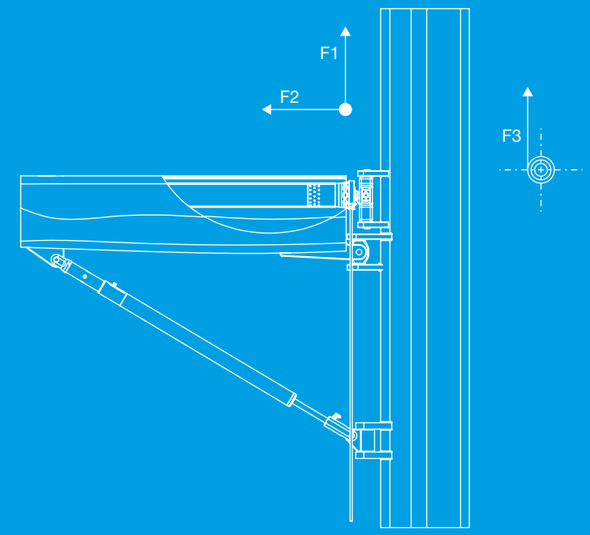

Mandrel External Ø mm	110	140
Boom max length (indicative not binding) m	6	8
F1 Vertical Pull max WL* t	1,5	2,5
F2 Horizontal Pull max WL* t	1	2
F3 Reefed Sail Vertical max WL** t	1,5	2,5
Weight kg	10	14 - 17

*with sail fully open

** calculated on an intermediate Ø

160 mm on mandrel Ø 110
200 mm on mandrel Ø 140

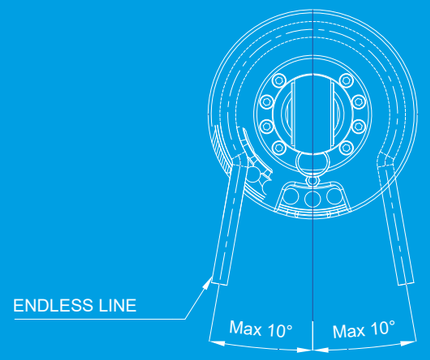

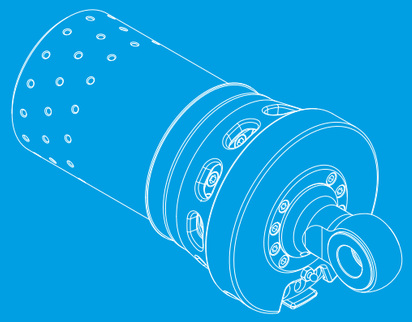

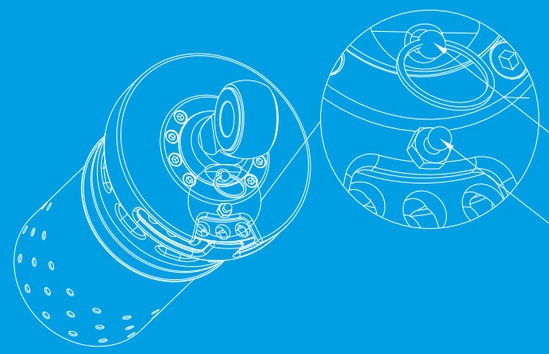

GFM (B13) - (B15)

manual foresail furler

Manual foresail furler available in different sizes C0, C0T, C1, C2, C3, C4, C5 and C6 (for either 1x19 Wire stays from Ø 4 to Ø 26 mm, or Rod from #10 to #91). The kit is supplied complete with aluminum furling foils and halyard swivel. It is equipped with link plates which may be cut to measure in order to customize tack height.

The furling drum rotates on a double race of ball bearings, which do not require neither lubrication nor maintenance. The furling drum is hollow inside, thus allowing for a turnbuckle to be housed inside and for the stay to pass through.

The drum is entirely made in anodized aluminum alloy and s.s. parts are insulated by means of a nylon film. It has been conceived in order to be easily fitted by means of simple tools.

C6 drum is entirelly manufactured in polished s.s.

For below deck version, material and dimensions of both flange and cap are to be customized upon client requirements.

+ Drum rotates on a **double ball bearing race**

+ Halyard swivel rotates on a **double ball bearing race**

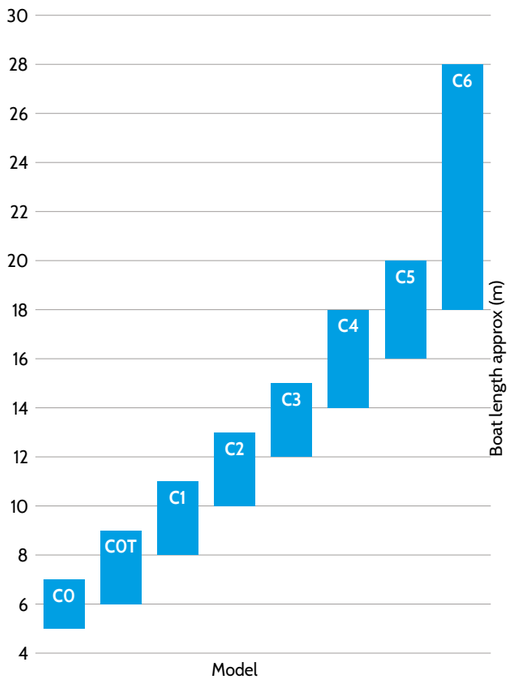

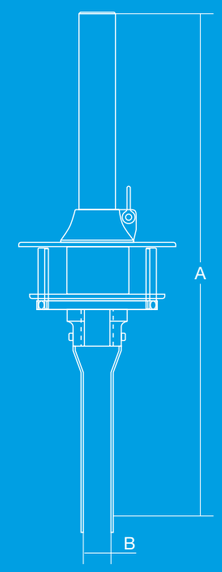

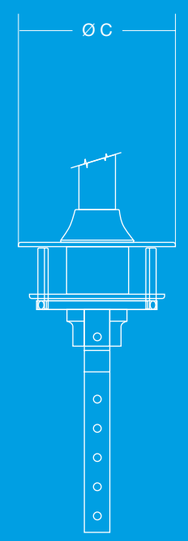

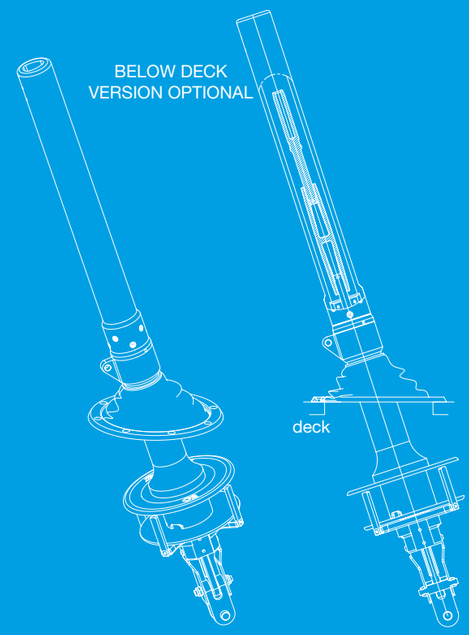

Model	A mm	B mm	Ø C mm
C0 / C0T	482	28	132
C1	500	30	179
C2	692	37	214
C3	788	50	266
C4	788	50	266
C5	1014	93	286
C6	933	109	365

Model	C0	C0T	C1	C2	C3	C4	C5	C6
Max forestay Ø mm	4 -7	4 -7	5 - 8	8 - 10	10 - 12	12 - 14	14 - 16	26
Equivalent in # rod	-10	-10	-10	-17	-22	-30	-40	-60 -76 -91
Clevis pin Ø mm	8-10	8-10-12	8-10-12	12-14-16	16-18-22	16-18-22	21,5-22-25	35
Foil type	BMG30R	BMG30R	BMG30R	BMG40R	BMG40R	BMG50R	BMG52	BMG60-70-80
Foil length m	1,5	1,5	1,5	1,5	1,5	1,5	3,0	3,0
Weight kg/m	0,66	0,66	0,66	0,92	0,92	1,32	1,77	2.4 - 2,7 - 3
Furling line	Included	Not included						
Max sail area (m^2 150%)	27	30	45	70	100	135	150	-
Max stay length (suggested) m	9	10,5	15	18	19,5	21	25	33
Weight kg	1,6	1,6	2,8	4	5,8	6	14	65

GFI (B57)

hydraulic foresail furler

Bamar “GFI” series: hydraulic systems to furl and reef sails. A combination of innovative technology and experience gained while working with prestigious boat yards.

These furlers offer and grant high performances and long duration, since they are designed and manufactured from high quality materials by means of CNC machines.

Mechanisms that require very low maintenance, with vanguard transmission systems. The use of high quality industrial products, bearings, gears, and endless screw, create a smooth and silent reduction gear with automatic stop.

The high torque output is granted by the use of orbital hydraulic motors. The worm screw reduction gear is an irreversible mechanism which absorbs the torque created by the sail area without passing it onto the hydraulic motor.

The GFI series is equipped with a stay tensioning turnbuckle. Standard bodies are made from black hardcote anodized aluminium alloy.

\+ **Safety protection** on manual emergency clutch.

\+ Available in the “C” version with integrated **hydraulic stay tensioner.**

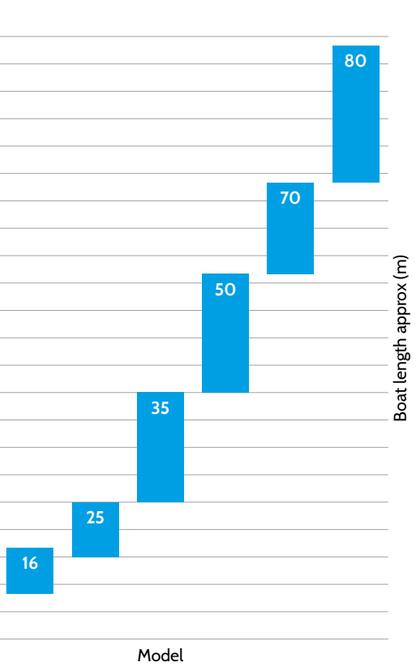

VERSION WITH TURNBUCKLE

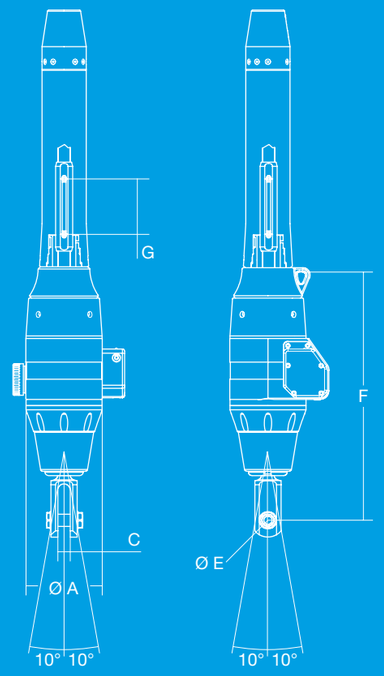

VERSION WITH TURNBUCKLE AND STAY TENSIONING CYLINDER

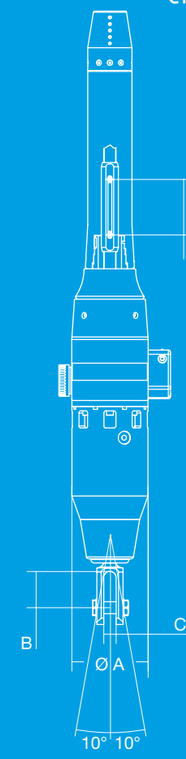

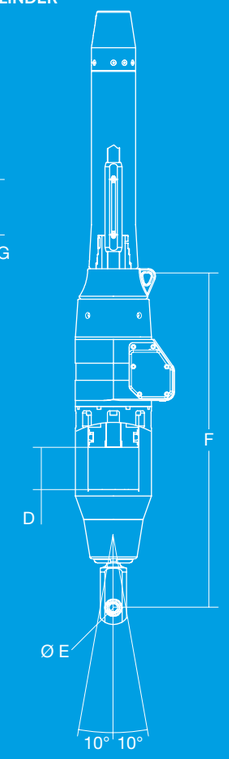

Model	Ø A mm	B mm	C mm	D mm	Ø E mm	F mm	G mm
12 - 12 C	148	40	29	100	15,6 - 25	492 - 680	100
16 - 16 C	177	50	29	100	25 - 28,5	558 - 760	100
25 - 25 C	197	88	35	150	31,5 - 35	621 - 884	150
35 - 35 C	227	115	46	150	35 - 44	729 - 984	150
50 C	240	custom	custom	300	custom	1324	210
70	-	-	-	-	-	-	-
80	-	-	-	-	-	-	-

Model	12 - 12 C	16 - 16 C	25 - 25 C	35 - 35 C	50 C	70	80
Max forestay Ø mm	10-16	16-19	22-26	26-32	-	-	-
Equivalent in # rod	-30 -40	-40 -48	-60* -91	-91 -170	-170 -260	-320 -430	-430 - 540
Clevis pin Ø mm	15,6-25	25-28,5	31,5-35	35-44	custom	custom	custom
Foil type	BMG52-60	BMG60-70	BMG80-90-110	BMG90-110	BMG110-125	BMG125-185	BMG185-S9,5-S10
Weight kg	26-32	42-52	55-74	82-105	188	-	-
Max stay length (suggested) m	27	33	40 - 42	48	60	70	-

*Monothread only

EJF (B46)

electric foresail furler

EJF has been developed combining technology and design.
The evolution of technology in the sailing world grows more and more towards semiautomatic mechanisms which satisfy the demand for performance, reliability and quality.

Bamar presents this new line of electric foresail Furlers that guarantee unique specifications, increased torque force, easy installation, low maintenance, thus improving comfort and safety onboard.

The reversible furling is based on a epicyclical mechanism to obtain high performance efficiency, whereas a magnetic brake (E/M) guarantees the mechanical lock both after complete furling in, and in any reefed sail position.

Standard bodies of the EJF series are made from black hardcote anodized aluminium alloy, or s.s.

Polished s.s. available upon demand.

- + **Idle manual emergency** when the system is electrically operated.
- + High performance reduction gear with **epicyclic transmission.**
- + Available in the "C" version with integrated **hydraulic stay tensioner.**

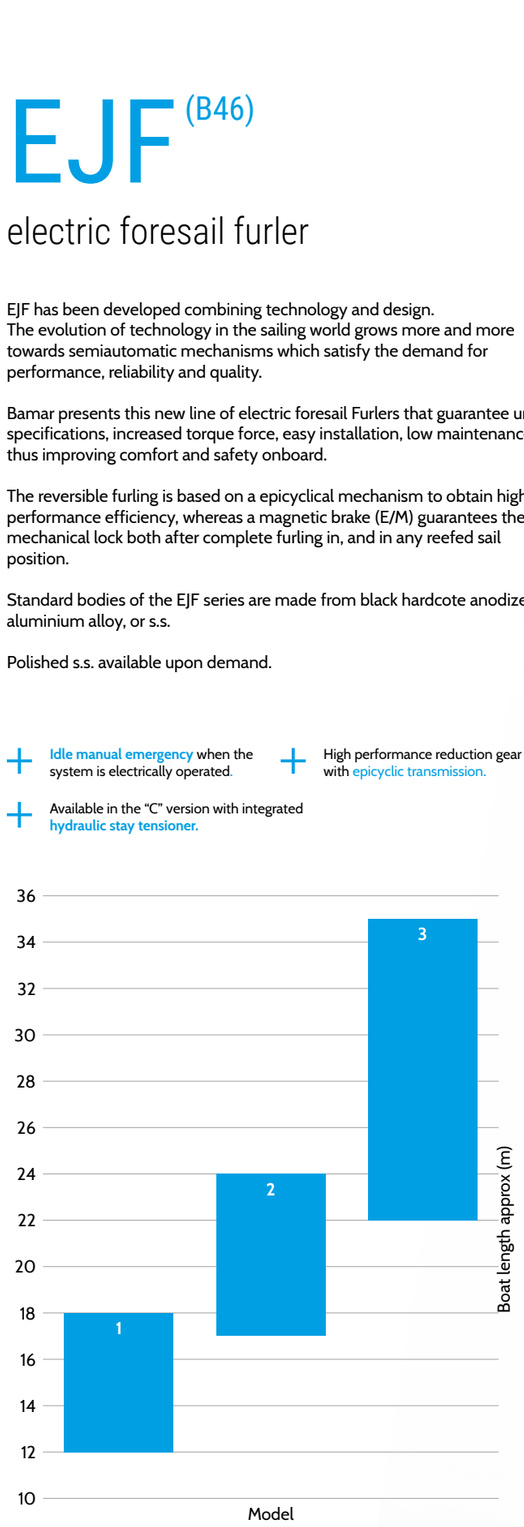

STANDARD VERSION

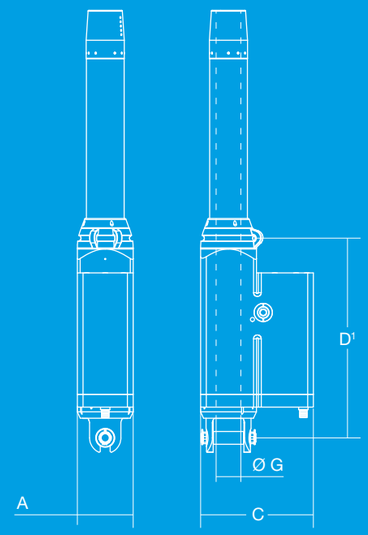

VERSION WITH TURNBUCKLE AND STAY TENSIONING CYLINDER

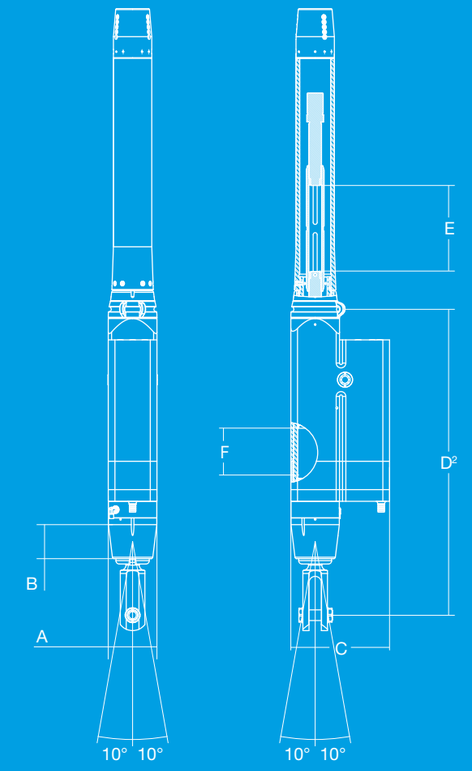

Model	A mm	B mm	C mm	D¹ mm	D² mm	E mm	F mm	Ø G mm
1	98	-	198	437	-	-	-	52
2 - 2 C	146	80	296	580	827	258	150	72
3 - 3 C	196	155	396	700	986	162	155	104

Model	1	2 - 2 C	3 - 3 C
Max forestay wire Ø mm	14	26	32
Equivalent in # rod	-48	-76/-91	-115/-150
Clevis pin Ø mm	15,6/25	25/34,6	custom
Foil type	BMG40 - 50R - BMG52	BMG - 60 - 70 - 80	BMG 90 - 110
Weight kg	20	65 - 95	120 - 195
Max sail area (m^2 150%)	100	220	310
Max stay length (suggested) m	26	33	44

GFSI (B79) - GFSE (B28)

“flush-deck” hydraulic or electric foresail furlers for fixed stays

The GFSI- GFSE series has been completely upgraded combining new technology and experience deriving from the previous series in production since 2003. These motorized furlers with self-aligning spherical fulcrum, designed for a structural flush-deck installation, may also be supplied with integrated stay tensioning cylinder.

The evolution of technology in the sailing world grows more and more towards semiautomatic mechanisms which satisfy the demand for performance, reliability and quality, connected to the reduction of overall dimensions and weight.

Bamar presents this new line of electric or hydraulic foresail furlers that guarantee unique specifications, high sail furling torque force and speed, synchronization among movements, easy installation, low maintenance, reduced overall dimensions and weight, thus improving comfort and safety onboard.

The flange and all components to be exposed above deck are manufactured in polished 316 stainless steel. Whereas, the reduction gear body and stay tensioning cylinder body to be fitted below deck are made in black hardcote anodized high resistance aluminium.

+ Available with tack adjustment kit (Cunningham).

+ Available in the “C” version with integrated hydraulic stay tensioner.

+ Hydraulic GFSI – Manual emergency function can be operated through a hand pump kit, in case of onboard hydraulic system failure.

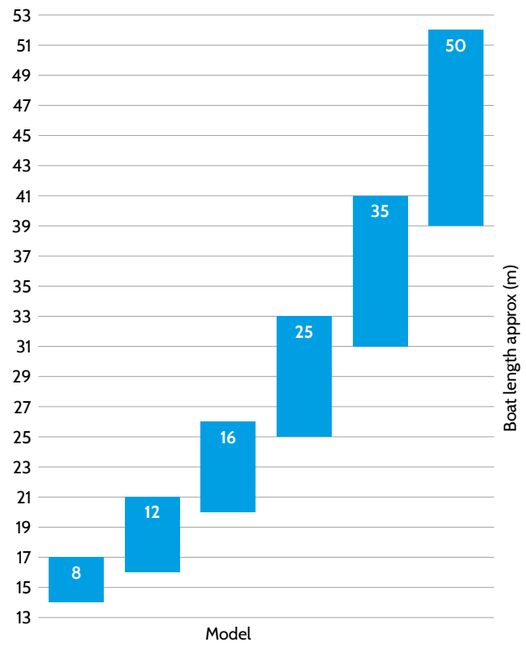

VERSION WITH TURNBUCKLE

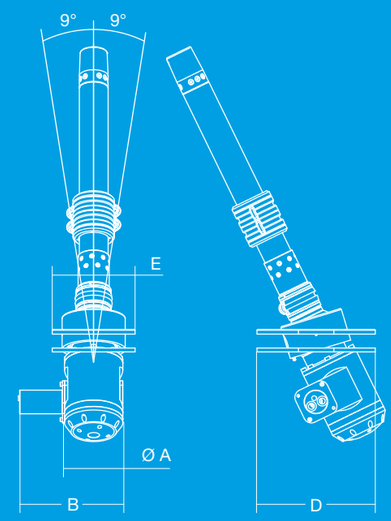

VERSION WITH TURNBUCKLE AND STAY TENSIONING CYLINDER

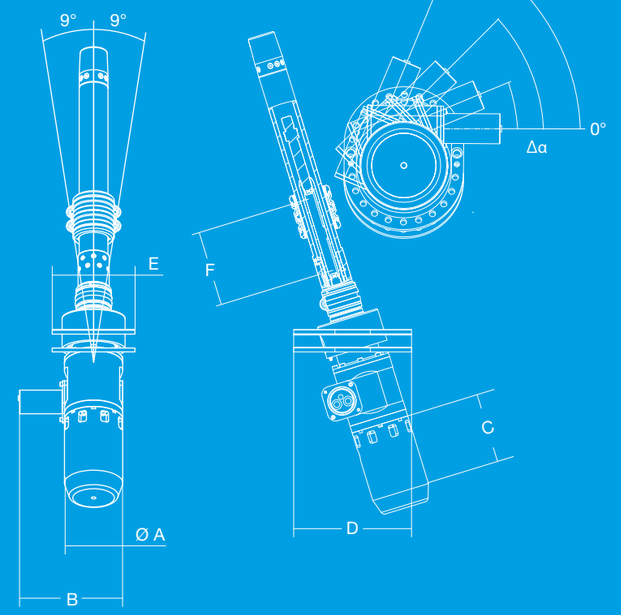

Model	Ø A mm	B mm	C mm	D mm	E mm	F Manual turnbuckle stroke mm	Δα
8	105	210	100	225	175	140	12°
12 - 12 C	148	265 - 459	100	300	210	190	15°
16 - 16 C	177	270 - 531	100	300	240	190	11,25°
25 - 25 C	197	329	150	365	280	240	11,25°
35 - 35 C	227	360	150	396	324	250	11,25°
50 C	260	425	300	520	450	300	9°

Model	8	12 - 12 C	16 - 16 C	25 - 25 C	35 - 35 C	50 - 50 C
Max forestay in # rod	-22 -30	-40 -48	-60 -76	-91 -115	-150 -170	-260 -320
Foil type	BMG50R	BMG52	BMG60-70-80	BMG80-90-110	BMG90-110	BMG110-125
Weight kg	29	50 - 60	75 - 88	130 - 140	167 - 200	300 - 350
Max stay length (suggested) m	21 - 23	27	33	40 - 42	48 - 50	60

GFSI CTS (B74)

“flush-deck” hydraulic foresail furler for torsional stays

The new GFSI CTS series represents the natural evolution of the standard “flush deck” GFSI furlers, which only involved the use of non-torsional structural stays with carbon or aluminum furling foils.

It has been designed to be used with structural torsional stays, which the sail is directly furled on. Therefore, this solution allows a reduction in weight.

The stay can be tensioned in real time thanks to the integrated hydraulic cylinder (custom strokes and position sensors available upon request).

The sail tack can also be adjusted in real time by means of a sliding floating tack (cunningham) driven by a hydraulic cylinder installed below deck.

Adequate speed and furling torque are guaranteed by the hydraulic motor integrated in the furling unit (management through standard hydraulic plant on board).

The flange body, all components exposed on deck and the stay tensioning cylinder below deck are made of polished stainless steel. Whereas the gear box body is made of black hardcote anodised high mechanical strength aluminum alloy.

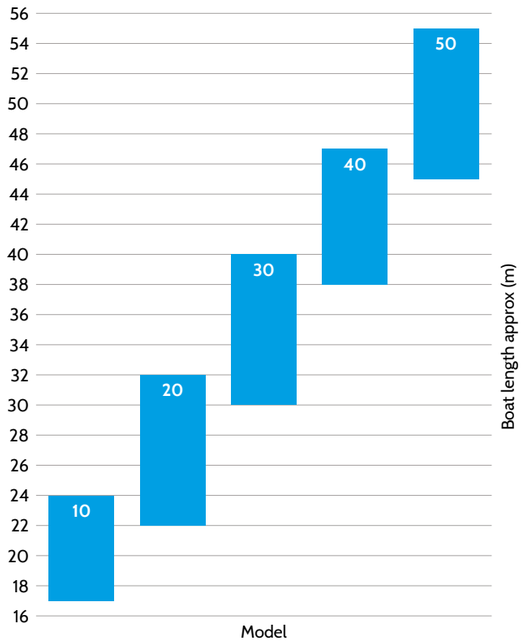

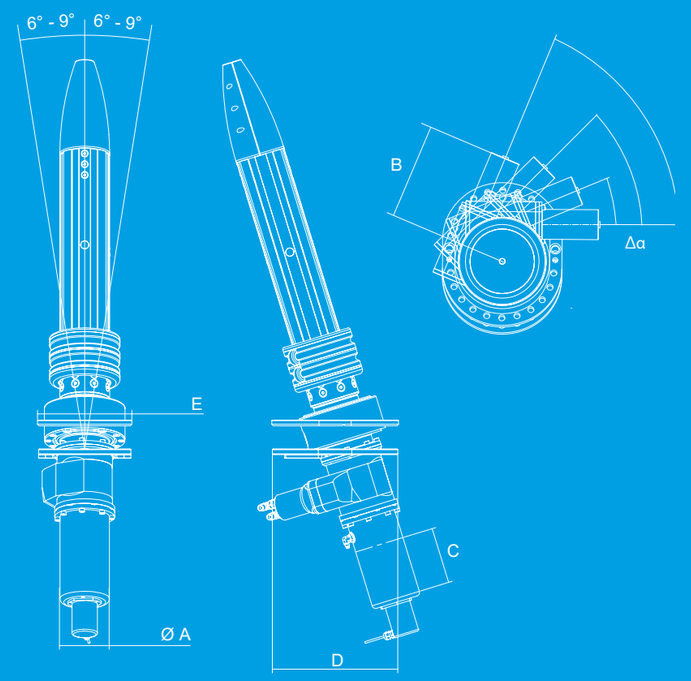

Model	Ø A mm	B mm	C mm	D mm	E mm	Δα
10	-	-	-	-	-	15°
20	132	263	150 (300)	338	252	11,25°
30	160 - 170	320 - 330	200 (350)	400 - 430	300 - 320	11,25°
40	-	-	-	-	-	11,25°
50	-	-	-	-	-	9°

Model	10	20	30	40	50
Stay Tensioning Cyl. W.L. t	10 - 13	20 - 23	30 - 33	40 - 43	50 - 53
Speed RPM	30 - 45	30 - 45	30 - 50	30 - 55	30 - 55
Torque Nm	300 - 500	500 - 700	900 - 1250	1500 - 2000	-

SIT (C32) & SET (C31)

“flush-deck” hydraulic or electric furler with cylinder for removable stays

Furling units with self-aligning spherical fulcrum, designed for a “structural” flush-deck installation, are also available with integrated stay tensioning cylinder for the removable stay

They may be manufactured with either direct motor “D” in line with the stay, or with motor parallel to the stay “P” to keep even smaller overall dimensions.

The system allows for:

- the use of any type of flexible removable stay (PBO, Kevlar, etc... not included in the supply).
- a simple and fast replacement of sails, thanks to both its shape and quick release pins (supplied upon demand).
- stay / sail tension adjustment thanks to the integrated hydraulic cylinder.
- furling and unfurling any type of sail, such as Code Zero, Drifter, Genoa, Blade, Jib, etc...
- an easy and quick use of the sail. You just have to hoist the stay with the sail furled around it by using its halyard; correctly lock the halyard; proceed by tensioning the stay depending on conditions; then unfurl the sail.

+ Manufactured with polished special steel alloys.

+ It combines three different functions in one system: it furls, pulls and self-aligns.

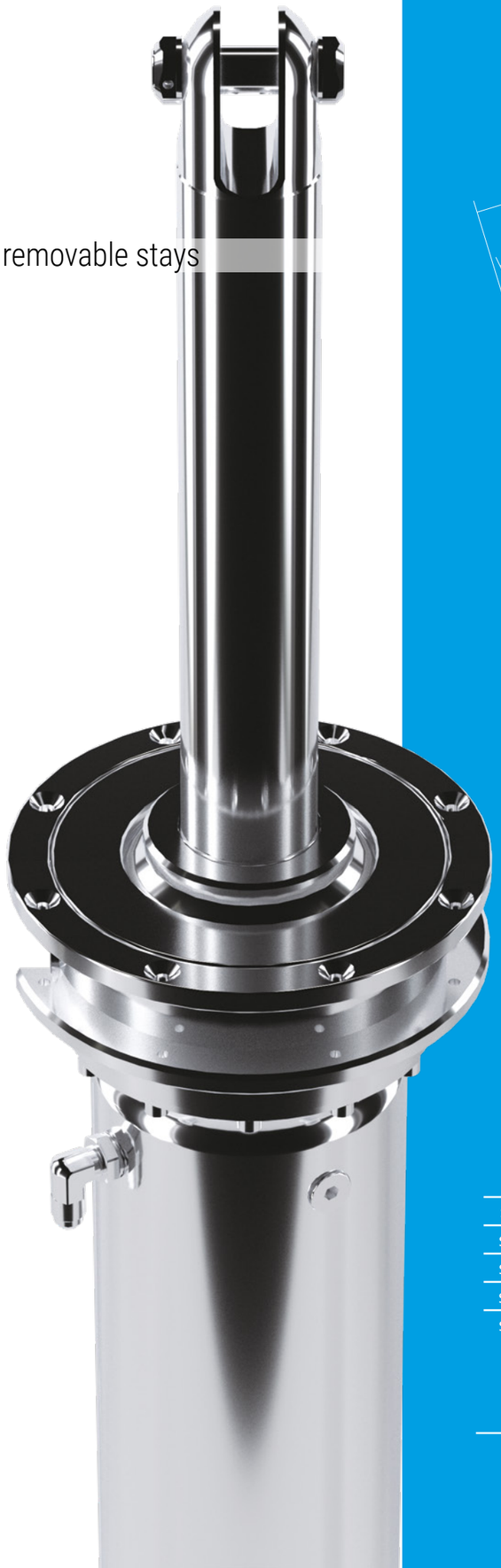

OVAL FLANGE WITH DIRECT IN LINE MOTOR “D”

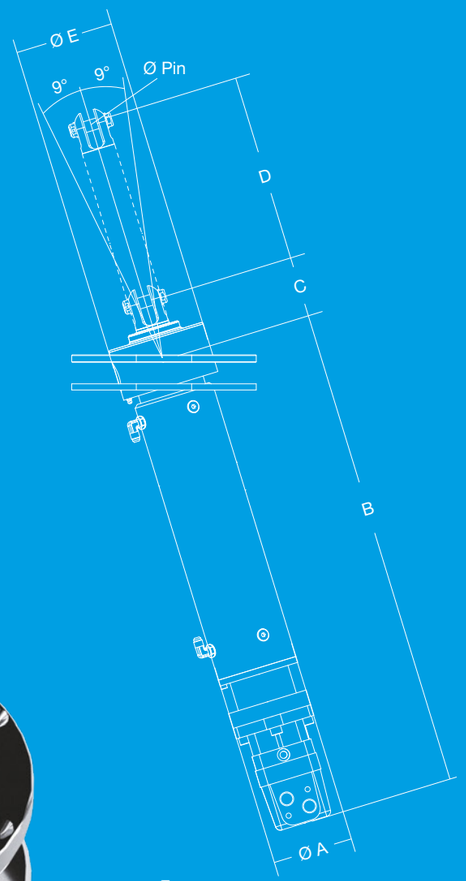

ROUND FLANGE WITH DIRECT IN LINE MOTOR “D”

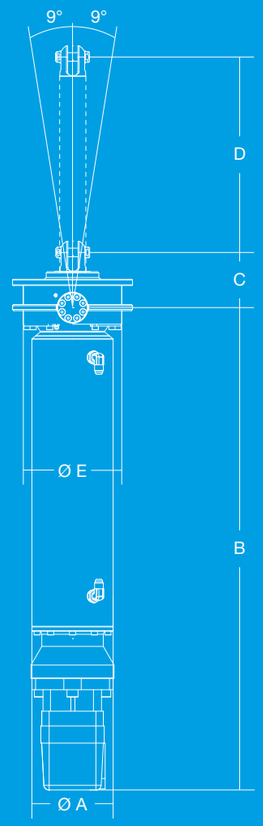

ROUND FLANGE WITH PARALLEL MOTOR “P”

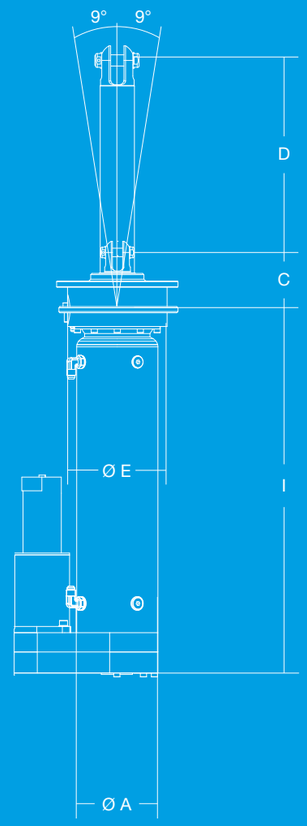

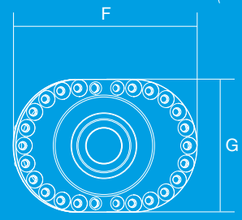

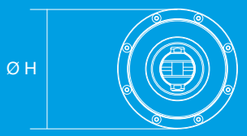

Model	Ø A mm	B mm	C mm	D mm	Ø E mm	F mm	G mm	Ø H mm	I mm	Ø Pin mm
SIT 10 CD	131	785	100	300	160	300	210	195	583	18
SIT 20 CD	165	907	127	350	190	300	240	228	724	26
SIT 30 CD	190	925 - 975	125 - 175	400	220	365	250	230 - 240	740 - 780	34
SIT 40 CD	210	1000 - 1050	150 - 200	450	260	396	324	290 - 315	800 - 840	40
SIT 50 CD	230	1150 - 1250	160 - 210	500	360	520	450	390 - 435	910 - 980	45

Model	SIT 10 CD/P	SIT 20 CD/P	SIT 30 CD/P	SIT 40 CD/P	SIT 50 CD/P
Max Stay Working Load t	10	20	30	40	50

Foil (B82)

with expanding openable connector

The connector is made up by three aluminium parts and by Delrin® bushes composed by two half-bearings. Such system allows for the installation of the foils both on wire stays with a swage threaded terminal fitted on, and on rod stays (even after the terminal has been swaged).

The connectors are manufactured from aluminium alloy and then treated with hardcote anodizing. These splice pieces, with their innovative "expanding" system, make the foils become a monolithic element, without stressing the screws that hold the splice pieces linked to the foils.

Bamar systems represent the ideal solution for all motorized equipment undergoing high torque loads.

Complete range of foil kits available in carbon fibre as well, with either single or double luff groove.

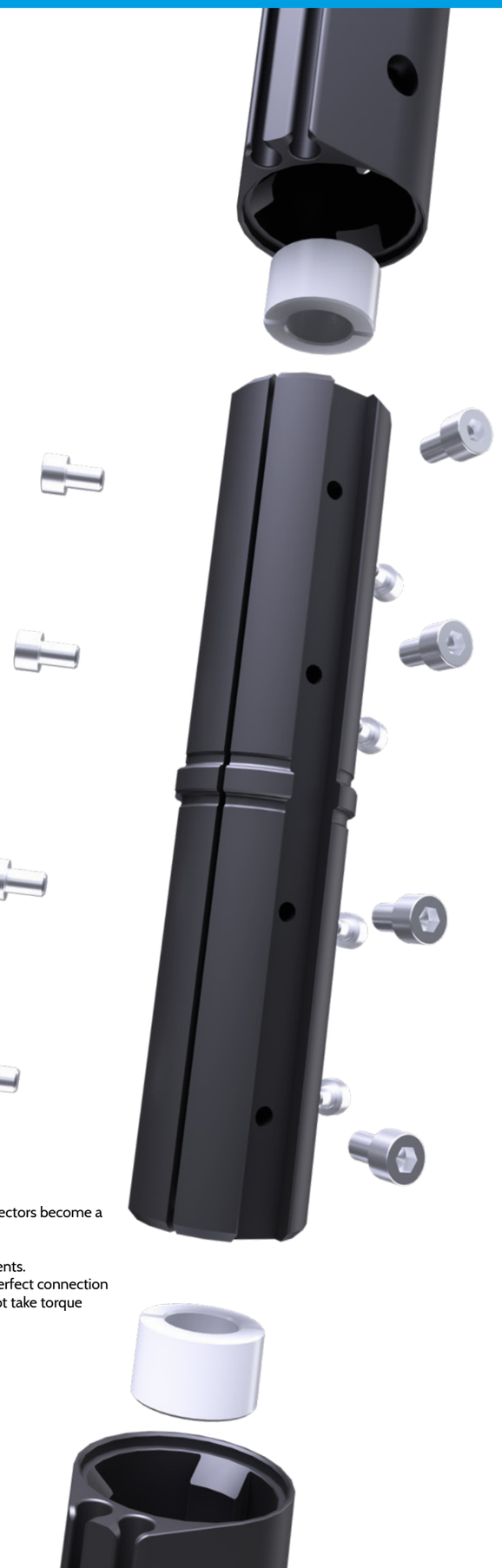

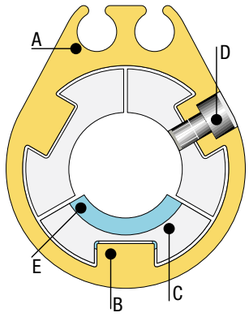

A. Special section foil. It allows foils and connectors become a monolithic piece.
B. "Anti-rotation" key, integrated in the foil.
C. Expanding connector made by three elements.
D. Flush-mounted screws that allow for the perfect connection between connector and foil (the screws do not take torque load).
E. Delrin® bushes embracing the stay.

STANDARD FOIL

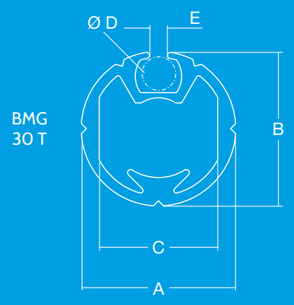

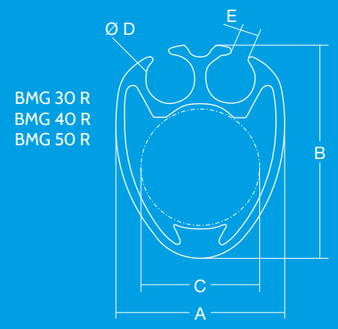

FOIL WITH EXPANDING OPENABLE CONNECTOR

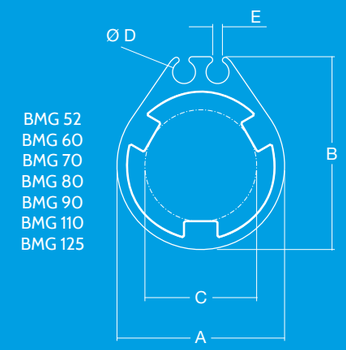

Model	Standard foil				Foil with expanding openable connector						
	30 T	30 R	40 R	50 R	52	60	70	80	90	110	125
1x19 wire Ø (max) mm	8	8	10	14	14	16	22	26	26	32	--
ROD # (max)	-10	-10	-17	-30	-48	-48	-76*	-91	-91 (-115*)	-170	-320
A mm	30	23	32	38	43	50	60	70	80	100	114
B mm	30	30	40	50	52	60	70	80	90	110	125,5
C mm	23	16	23	30	29	30	40	52	54	74	90
Ø D mm	6	7	9	9	6	8	8	8	8	8	10,5
E mm	3,5	3,5	4	3	3	3,5	3,5	3,5	3	3	4,5
Lunghezza profilo intermedio mm	3000	1500	1500	1500	2980	2980	2980	2980	2980	3000	3000
Weight kg/m	0,62	0,66	0,92	1,32	1,77	2,44	2,77	3,03	4,02	5,6	7,28

* monothread only

“OPEN” high load halyard swivel (B80)

The swivel is machined from aluminium alloy treated with hardcote anodizing, thus allowing for a high protection from wear and atmospheric agents.

The internal part touching the foils is coated with a plastic material that grants its smooth sliding along the foils, and protects it from localized wear when the sail is working.

The innovative design allows for an easy and quick inspection of the internal ball bearings without taking the swivel off from the foils. The high load resistance of the halyard swivel is granted by Torlon® ball bearing races.

These give an extremely advantageous ratio between weight and working load.
The result is a positive gain in weight.

STANDARD SWIVEL
BMG 30 R - BMG 40 R - BMG 50 R
SHACKLES ONLY

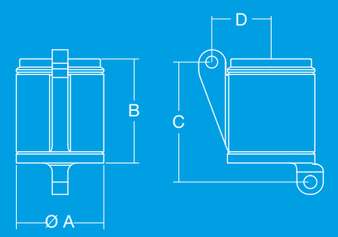

HIGH LOAD HALYARD SWIVEL
BMG 52 - BMG 60 - BMG 70 - BMG 80
BMG 90 - BMG 110
LOOPS ONLY

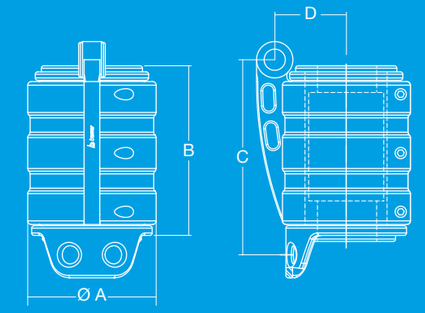

BMG 125 - BMG 125 HR - BMG 160
LOOPS ONLY

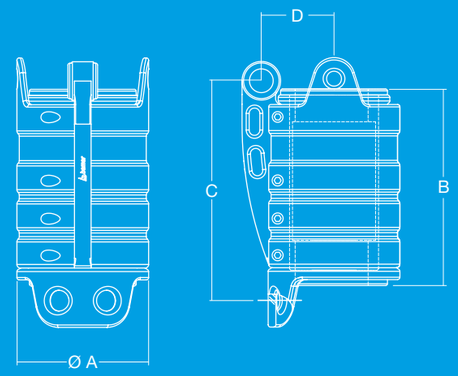

Model	Standard			High load openable								
	30 R	40 R	50 R	52	60	70	80	90	110	125	160	BMG 125 HR
Ø A mm	88	78	374	104	118	140	150	184	212	222	284	222
B mm	98	92,8	122,5	152	152	173	173	250	290	331	416	331
C mm	115	107	28,5	176	178	204	206	282	321	374	469	374
D mm	47	53	59	59	66	75	82	104	118	123	163	123
Peso kg	0,5	0,6	0,9	2,1	2,9	5	5,3	9,9	15,8	19,1	40,9	-
Working Load (max) t	0,6	0,9	1,5	2,9	4,2	6	7	8	10	15	24	40

RLG EVO (C11) - (C60)

furling system for Gennakers

New furling system for Gennakers (sails with free flying luff), an evolution of the well-known and patented ROLLGEN system. This new development is characterized by both higher performances in terms of working load and smoothness in movement, and weight decrease by roughly 60%. Such characteristics have been obtained thanks to the use of materials such as Ergal aluminium alloy and 17-4PH steel.

Differently from the previous model, in the new RLG EVO, the tack swivel (fundamental element when furling free flying sails) is independent from the drum. In fact, it is now integral part of the special ROLLGEN stay.

Consequently, drum and halyard swivel may as well be used to furl CODE 0-type sails (sails hoisted on anti-torsion stay), whereas the special stay totally integrates the furling system for free flying sails (Gennakers) which is Bamar ROLLGEN "patent".

+ Easy endless line loading. You do not have to take the drum apart.

+ Made of Ergal aluminium alloy and 17-4PH stainless steel. It makes use of sealed high load bearings.

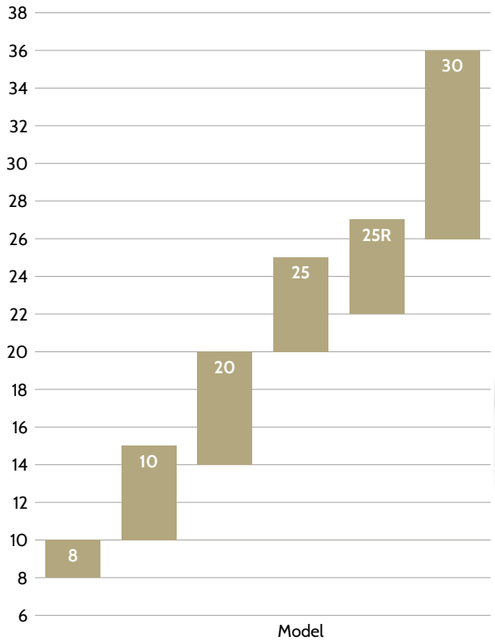

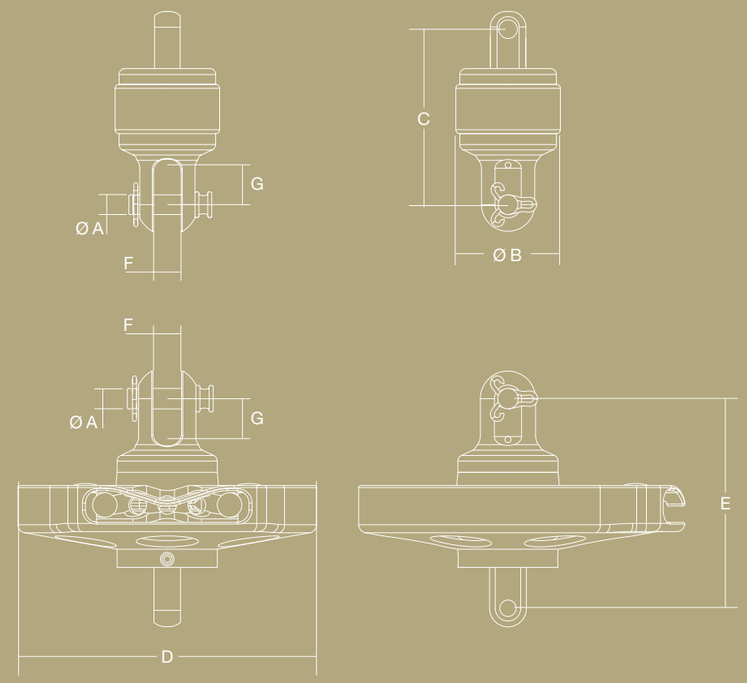

Model	Ø A mm	Ø B mm	C mm	D mm	E mm	F mm	G mm
08	8	45	78	110	91	13	15
10	10	48	89	146	102	14	17
20	12	60	113	210	127	18	22,5
25	16	76	136	260	144	25	28
25R	18	78	136	260	150	21	31
35	22	103	152	299	193	25	32

Model		8	10	20	25	25R	35
Drum Ø mm		110	146	210	260	260	299
Stay Ø mm		13	15	18	-	-	-
Max stay length (m)		15	std 17/ 3K 20	std 22 / 3K27	-	-	-
Max sail area (m² approx)		95	150 / 170	180 / 210	-	-	-
Weight kg	Halyard swivel	0,27	0,34	0,88	1,25	1,42	3,10
	Drum	0,54	0,73	1,61	2,80	2,95	5,52
Working load kg		2000	3000	5000	8000	10000	15000

ROLLGEN STAY KIT (C64)

special stay for RLG EVO

PATENTED

RollGen is the special patented stay that may furl Gennakers and less specifically all sails with free flying luff.
The stay is made of a special anti-torsion stay that may transmit the furling torque to the sail head. It is covered by a special EPDM gaiter that absorbs compression stress that would weigh down upon the sail cloth. Furthermore, the gaiter allows for the sail to furl on a bigger diameter compared to the naked stay. While furling out, it allows the sail to unroll at different speeds, since it absorbs stress that would weigh upon the sail and would make the furling out operation not correct or impossible.
These elements make of RollGen a unique and patented furler that is different from other existing systems that are only apparently similar systems.
The standard RollGen anti-torsion stay is made of unidirectional special fibres realized in kits with maximum lengths and different sizes. For RLG EVO 10 and 20 we may supply a special high performance 3K stay made with inextensible material in order to enhance its torsional capacity, in order to adapt it to longer lengths. In any case, ths stay supplied can be easily adapted to the measure taken onboard. The measuring and cutting operation is very simply done with the use of simple tools that are included in the kit.
After having furled the Gennaker on the special RollGen stay, you may disconnect drum and halyard swivel by means of quick release pins. These may be thus used in order to furl other sails, such as Code 0 or Drifters.

The “Luff Control” completes the system. It is a double swivel that matched with the ROLLGEN stay allows you to adjust the tension of the Gennaker luff by pulling on a line from the cockpit. The “Luff Control” may be fitted on existing ROLLGEN systems as well. Furthermore, it allows you to significantly “shorten” the luff when closing in the sail, thus placing the luff closer to the ROLLGEN stay. This operation will make furling simpler and
faster, especially when you are making use of “deep” cut sails with long luffs which are usually more difficult to furl.

- **Luff Control** It allows you to adjust the sail luff tension.
- **Tack swivel** integrated in ROLLGEN stay lower clamp.
- The existing gennaker **doesn't need modifications.**
- The patented stay is covered by a **special gaiter** which protects the sail and allows for the correct furling/unfurling.

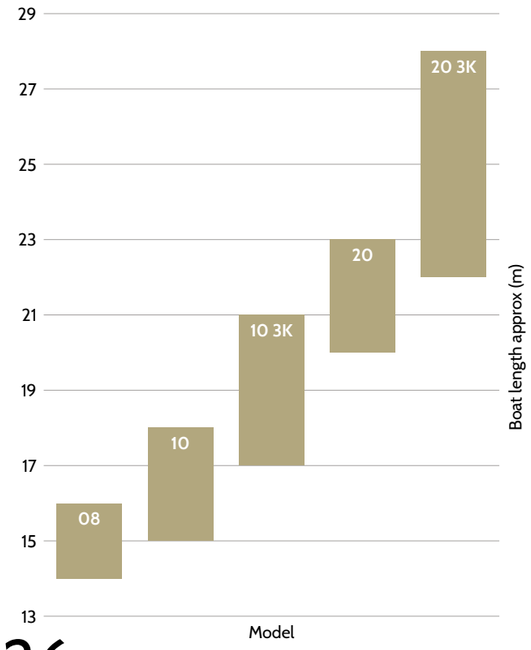

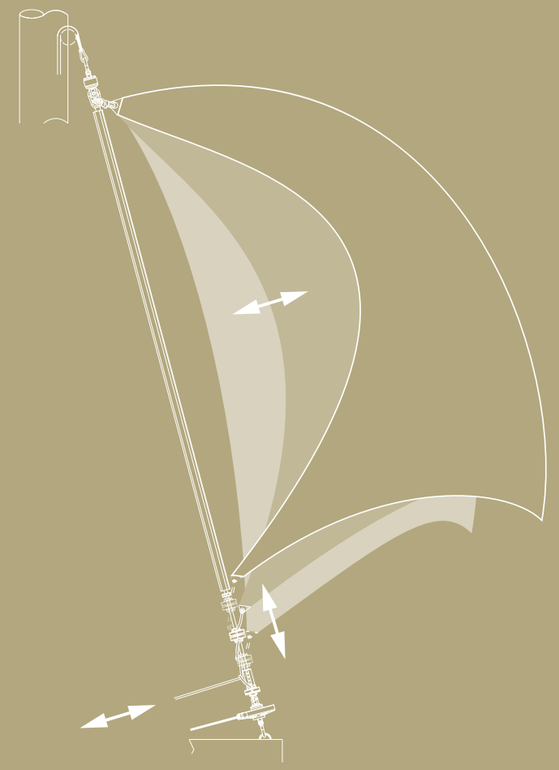

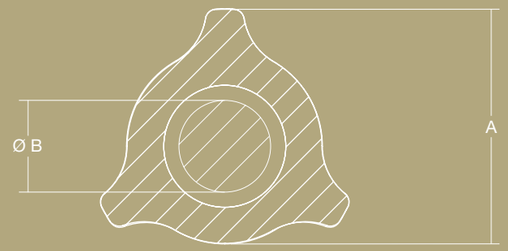

Model	A mm	Ø B mm
08	28	13
10	39	15
10 3K	39	13
20	48	18
20 3K	48	18

Model	8	10	10 3K	20	20 3K
Max stay length m	15	17	20	22	27
Stay Ø mm	13	15	13	18	18
Weight kg/m	0,25	0,48	0,46	0,73	0,76
Working load kg	900 kg	1500	1500	2500	2500

RLG EVO S (C11) - (C60)

furling system for structural stays

New furling system for structural stays, evolution of the wide known and patented ROLLGEN system.This latest innovation is characterized by a line stowing drum to be used in combination with NO TORSION stays.

Light-weight and functional: these characteristics are obtained thanks to the use of materials such as Ergal and 17-4PH steel.

It is manufactured from aluminum blocks thanks to the use of CNC machines and makes use of high load bearings in order to allow for the parts to slide perfectly.

+ It makes use of sealed high load bearings.

+ **Reduced overall dimensions.** It allows you keep the sail tack very low on deck.

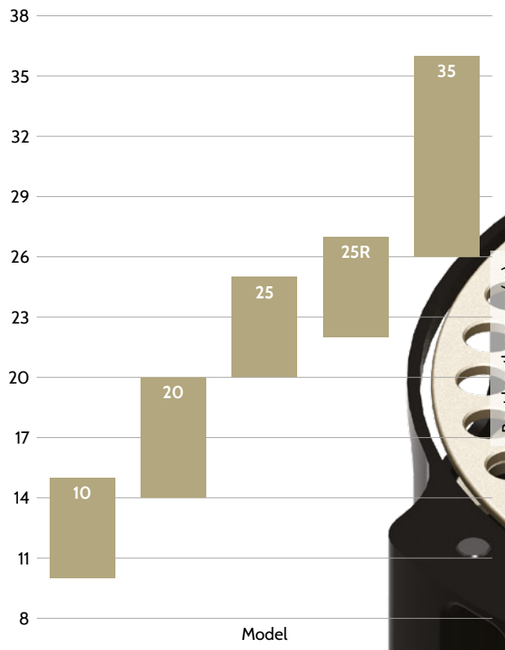

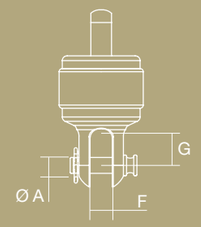

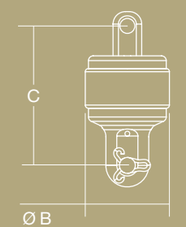

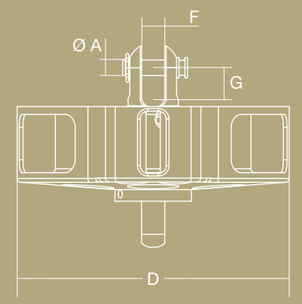

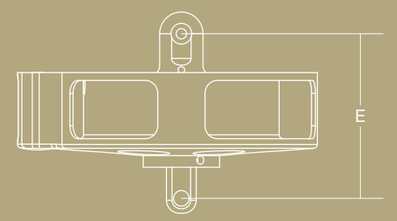

Model	Ø A mm	Ø B mm	C mm	D mm	E mm	F mm	G mm
20	12	60	113	210	127	18	22,5
25	16	78	129	260	144	25	28
25SR	18	78	136	240	150	21	31
35	22	100	172	300	194	25	32

Model		20	25	25SR	35
Pin Ø mm		12	16	18	22
Drum Ø mm		210	260	240	300
Ø 6 mm line max stowage m		13	17	24	-
Weight kg	Halyard swivel	0,88	1,25	1,42	3,10
	Drum	2,30	3,73	3,60	6,92
Max WL kg		5000	8000	10000	15000

Optional EVO

Luff control

It is a double swivel that matched with the ROLLGEN stay allows you to adjust the tension of the Gennaker luff by pulling on a line from the cockpit. The “Luff Control” may be fitted on existing ROLLGEN systems as well. Furthermore, it allows you to significantly “shorten” the luff when closing in the sail, thus placing the luff closer to the ROLLGEN stay.

Stay kit Rollgen compatibility

8	10	10 3K	20	20 3K
✓	✓	✓	✓	✓

Snap Shackle

Fixed quick release device that may be fitted underneath the drum in order to speed up installation on deck.

RLG EVO compatibility

8	10	20	25	25R	35
✓	✓	✓	custom	✗	✗

RLG EVO S compatibility

20 S	25 S	25 SR	35 S
✓	custom	✗	✗

Double lashing pin

Pin with double slot to house either a high load loop or a lashing to connect halyard swivel / drum to halyard or fittings onboard. Combined with the special high load pulley and loop, it creates halyard 2:1 purchase

RLG EVO compatibility

8	10	20	25	25R	35
✗	✗	✓	✓	✓	✗

RLG EVO S compatibility

20 S	25 S	25 SR	35 S
✓	✓	✓	✗

Pulley 2:1

High load pulley that together with a textile loop and double lashing pin may be used for halyard 2:1 purchase

RLG EVO compatibility

8	10	20	25	25R	35
✗	✗	✓	✓	✓	✗

RLG EVO S compatibility

20 S	25 S	25 SR	35 S
✓	✓	✓	✗

Optional EVO

Solid sheave

Special “sliding” element made to be fitted underneath EVO 25R drum to create a 2:1 or 3:1 tackle to tension the stay.

RLG EVO compatibility

8	10	20	25	25R	35
✗	✗	✗	✗	✓	✗

RLG EVO S compatibility

20 S	25 S	25 SR	35 S
✗	✗	✓	✗

Endless Line Kit

Endless line kit used to furl EVO drums. Made on purpose with a cover that gives the best grip on the EVO pulley groove. Furthermore, it grants a great feeling when used. It is available in different lengths and in two diameters: 8 mm and 10 mm. the kit includes a ratchet shackle, a loop and a snap shackle to lock it on deck.

RLG EVO compatibility

8	10	20	25	25R	35
✓	✓	✓	✓	custom	custom

RLG EVO S compatibility

20 S	25 S	25 SR	35 S
✗	✗	✗	✗

Thimbles

Special fittings to complete textile running rigging and stays
Made in black hardcote anodized Ergal aluminium alloy

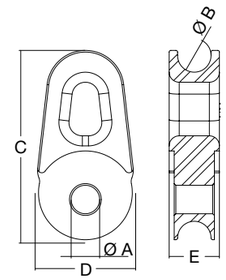

Thimble model	Ø A mm	Ø B mm	C mm	D mm	E mm
08	8,5	10	57	30	15
10	10,5	12	69	36	16
20	12,5	16	83	44	19

RLG EVO compatibility

8	10	20	25	25R	35
✓	✓	✓	✓	custom	custom

RLG EVO S compatibility

20 S	25 S	25 SR	35 S
✓	✓	custom	custom

Joint Swivel

Special tack swivel fitting made in aluminium and stainless steel to be installed on the upper fork of Code 0 furling drums and motorizations. When connected to RLG EVO custom stays it allows you furl free flying sails such as Gennakers, Asymmetric Spinnakers.
The loop to connect the sail tack is not supplied

RLG EVO compatibility

8	10	20	25	25R	35
✗	✗	✗	✓	✓	✗

RLG EVO S compatibility

20 S	25 S	25 SR	35 S
✗	✓	✓	✗

Motorized furlers compatibility

BWSE/I 10 t	PE/PI 10 t	SIT/SET 10 t
✓	✓	✓

Backstay Block (O90)

s.s. standing wire pulley

Special block to be used in order to split the backstay.
The stainless steel pulley has a specially shaped race that is compatible with multi-strand steel wires, thus ensuring long duration.

+ **High load** sliding bush and s.s. ball bearings.

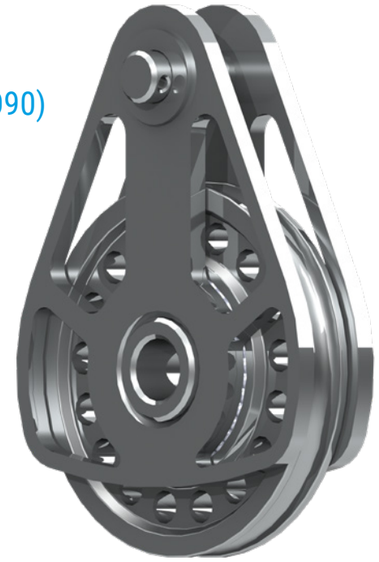

Boards (C90)

for single cable stay and strops

Made to complete head and tack angles to perfectly match EVO drums and halyard swivels.
They are made in hardcote anodized aluminium with shapes and slots fit to connect the sail angle by means of straps.

Low friction rings (C90)

Special “sliding” rings designed to match onboard lines and complete manoeuvres
They are made in hardcote anodized aluminium alloy undergoing dedicated surface treatments to reduce modern ropes friction

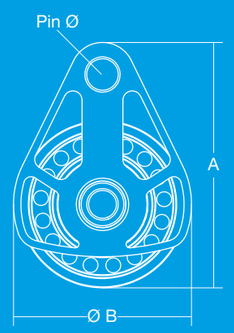

Model	A mm	Ø B mm	C mm	Ø D mm	Pin Ø mm	Weight kg	Breaking Load kg
100	162	100	17	10	15,6	1,30	10.000
120	194	120	20	12	18,5	1,90	14.000

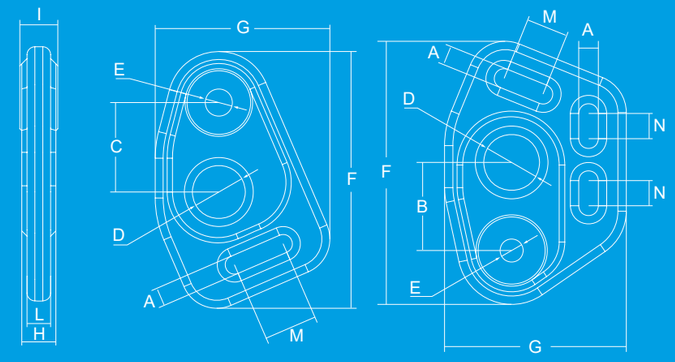

Furler RLG-CODE	A mm	B mm	C mm	Ø D mm	Ø E mm	F mm	G mm	H mm	I mm	L mm	M mm	N mm	WL kg	Weight kg	
08	10	33	30	20	8,5	91,0 95,0	60,4 66,0	11	12	-	20	-	2200	0,08 0,10	Head Tack
10	10	39	35	25	10,5	105,0 108,0	70,6 74,0	12	13	-	23	-	3300	0,12 0,15	Head Tack
20	12	46	41	30	12,5	133,0 136,5	91,4 97,0	16	17	-	25	-	5000	0,15 0,35	Head Tack
30 - 35	14	63	67	40	20,5 16,5	194,0 188,0	131,8 130,0	26 29	29 26	18	40 30	18	11000 8000	0,90 0,90	Head Tack
40 - 45	14	63	67	40	24,5 19,5	194,0 188,0	131,8 130.0	30 33	39 28	18	40 30	18	16000	1,00 0,90	Head Tack

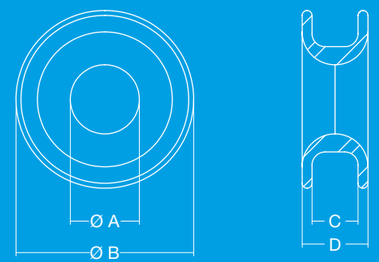

Low friction ring model	Ø A mm	Ø B mm	C mm	D mm
08	10,5	27	7	10
10	14	35	10	14
20	16	40	11	16
25	20	59	22	30

BWSE (C40)

electric furler for bowsprit

The BWSE furler has been designed in order to have the smallest overall dimensions possible and allow for an easy installation on any bowsprit.
It is to be used on sailing yachts looking for performance with the sail positioned on the extreme bow. Its high speed and sail furling torque make the furling operation easier and faster. Though the system was originally intended to be used on a bowsprit, it may be easily fitted below deck.
Bamar presents this new line of electric Code Furlers that guarantee unique specifications, such as reduced weight, easy installation, low maintenance, reduced overall dimensions, thus improving comfort and safety onboard.
Body and fork parts are made in 316 stainless steel in order to ensure the best resistance to marine conditions. Parts that are exposed on deck are mirror polished.

Combined with the special RollGen stay with tack swivel connection, these furlers allow you furl sails with free luff, such as the Gennaker.

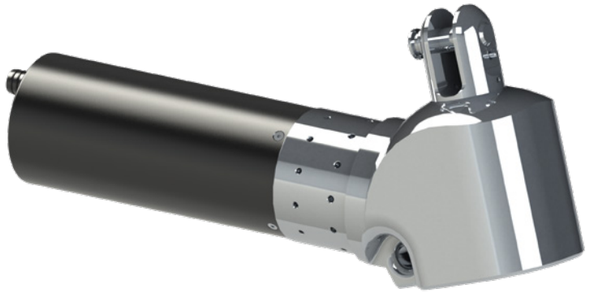

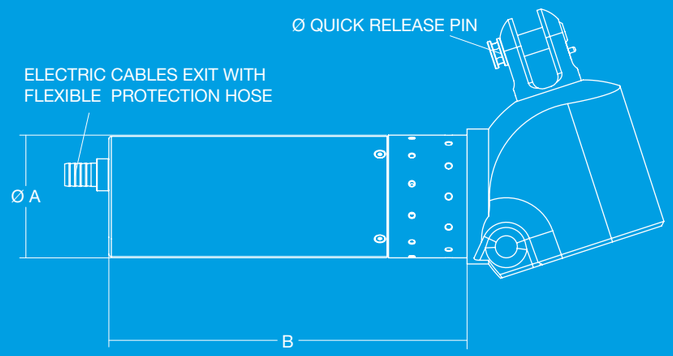

Model	Ø A mm	B mm
BWSE 5	85	373
BWSE 10	100	348
BWSE 20	120 - 140	350 - 450

Model	BWSE 5	BWSE 10	BWSE 20
Quick Release Pin Ø mm	12	18	26
Speed max rpm	50 - 100		
Weight kg	18	24	50 - 60
Max Stay Working Load t	5	10	20

BWSI (C40)

hydraulic furler for bowsprit

The BWSI furler has been designed in order to have the smallest overall dimensions possible and allow for an easy installation on any bowsprit.
It is to be used on sailing yachts looking for performance with the sail positioned on the extreme bow. Its high speed and sail furling torque make the furling operation easier and faster. Though the system was originally intended to be used on a bowsprit, it may be easily fitted below deck.
Bamar presents this new line of hydraulic Code Furlers that guarantee unique specifications, such as reduced weight, easy installation, low maintenance, reduced overall dimensions, thus improving comfort and safety onboard.
Body and fork parts are made in 316 stainless steel in order to ensure the best resistance to marine conditions. Parts that are exposed on deck are mirror polished.

Combined with the special RollGen stay with tack swivel connection, these furlers allow you furl sails with free luff, such as the Gennaker.

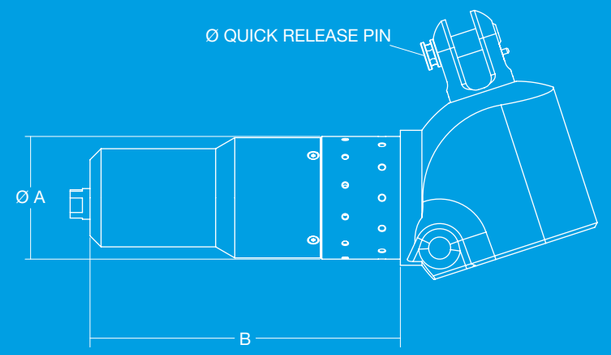

Model	Ø A mm	B mm
BWSI 5	-	-
BWSI 10	100	200 - 300
BWSI 20	120 - 140	350 - 450

Model	BWSI 5	BWSI 10	BWSI 20
Quick Release Pin Ø mm	12	18	26
Speed max rpm	50 - 100		
Weight kg	18	24	50 - 60
Max Stay Working Load t	5	10	20

PE (C35)

electric furling pad eye

This furling Pad Eye has been developed combining technology and design. The evolution of technology in the sailing world grows more and more towards semiautomatic mechanisms which satisfy the demand for performance, reliability and quality. Bamar presents this new line of electric Code Furlers that guarantee unique specifications, such as reduced weight, easy installation, low maintenance, reduced overall dimensions, thus improving comfort and safety onboard. Body and fork parts are made in 316 stainless steel in order to ensure the best resistance to marine conditions. Parts that are exposed on deck are mirror polished. At present, the PE system can be supplied in two sizes that are identified by the stay max working load: 10t and 20t.
Combined with the special RollGen stay with tack swivel connection, these furlers allow you furl sails with free luff, such as the Gennaker.

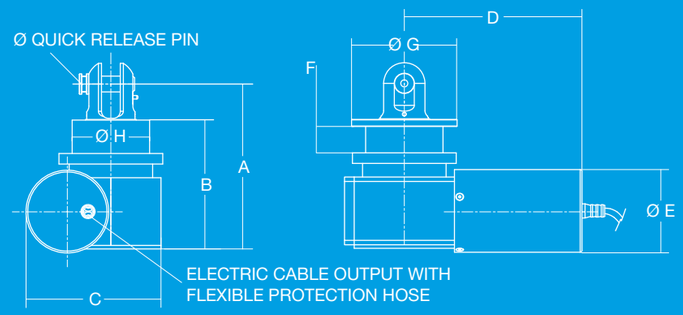

Model	A mm	B mm	C mm	D mm	Ø E mm	F mm	Ø G mm	Ø H mm
PE 10 A	188	147	154	232	94	30	120	88
PE 20 A	250 ± 350	175 ± 225	250 ± 350	250 ± 450	105 ± 120	40	160 ± 170	95

Model	PE 10 A	PE 20 A
Quick Release Pin Ø mm	18	26
Speed max rpm	50 - 100	
Max Stay Working Load t	10	20

PI (C36)

hydraulic furling pad eye

This furling Pad Eye has been developed combining technology and design. The evolution of technology in the sailing world grows more and more towards semiautomatic mechanisms which satisfy the demand for performance, reliability and quality.
Bamar presents this new line of hydraulic Code Furlers that guarantee unique specifications, such as reduced weight, easy installation, low maintenance, reduced overall dimensions, thus improving comfort and safety onboard. Body and fork parts are made in 316 stainless steel in order to ensure the best resistance to marine conditions. Parts that are exposed on deck are mirror polished.
At present, the PI system can be supplied in two sizes that are identified by the stay max working load: 10t and 20t.
Combined with the special RollGen stay with tack swivel connection, these furlers allow you furl sails with free luff, such as the Gennaker.
It may be manufactured with either orthogonal motor or direct motor in line with the stay.

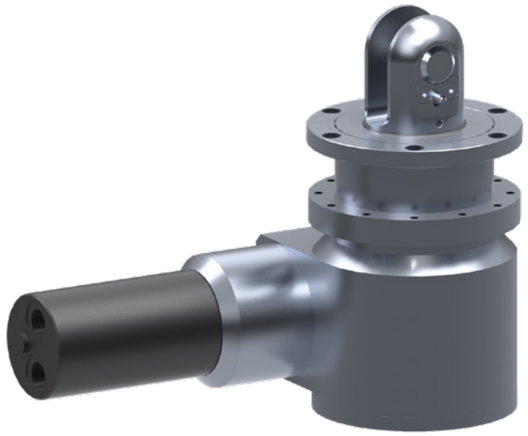

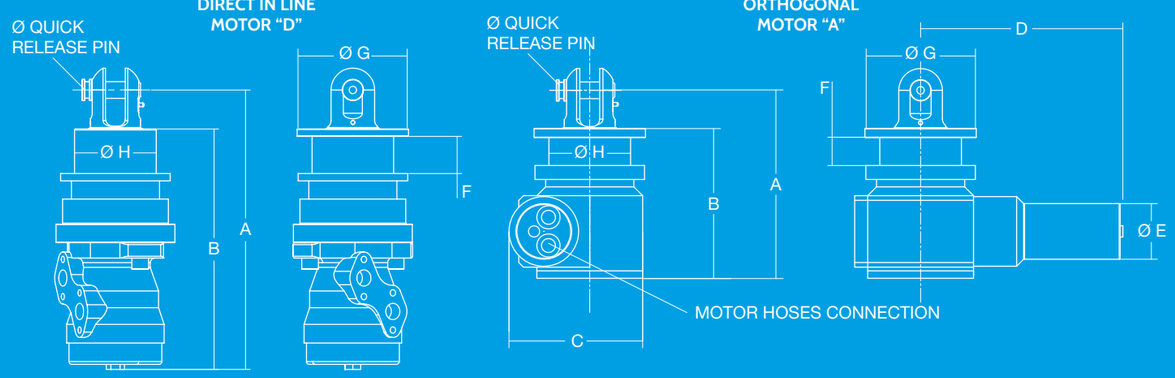

Model	A mm	B mm	C mm	D mm	Ø E mm	F mm	Ø G mm	Ø H mm
PI 10 D	301	259	-	-	-	40	120	88
PI 20 D	411	363	-	-	-	60	128	95
PI 10 A	188	147	144	218	60	30	120	88
PI 20 A	250 ± 350	175 ± 225	250 ± 350	250 ± 450	75 ± 120	40	160 ± 170	95

Model	PI 10 D/A	PI 20 D/A
Quick Release Pin Ø mm	18	26
Speed max rpm	50 - 100	
Max Stay Working Load t	10	20

RLG-CODE MEJ (C20)

electric furler

RLG-CODE furlers are also available in the electric motorized version MEJ.
The system is to be fitted either on a chain-plate on deck, or on a bowsprit.

The system is available in two different configurations:
“RollGen”, with the special stay; it allows you furl all common types of free flying asymmetric sails of standard construction.

“CODE” version (stay not supplied), instead, may be used to furl sails, such as Code Os, Drifters, etc., with luff integral to the stay.

RLG-CODE GFI (C21)

hydraulic furler

RLG-CODE furlers are also available in the hydraulic motorized version GFI.
The system is to be fitted either on a chain-plate on deck, or on a bowsprit.

The system is available in two different configurations:
“RollGen”, with the special stay; it allows you furl all common types of free flying asymmetric sails of standard construction.

“CODE” version (stay not supplied), instead, may be used to furl sails, such as Code Os, Drifters, etc., with luff integral to the stay.

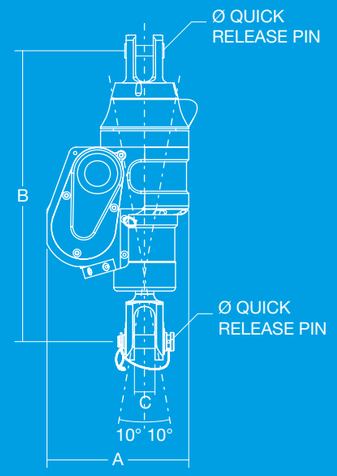

Model	A mm	B mm	C mm
1	195	413	22 - 25

Model	1
Max Speed rpm #	40
Quick Release Pin Ø mm	16 - 19
Weight kg	16
Motor Power w	400
Stay Max Load t	7,5

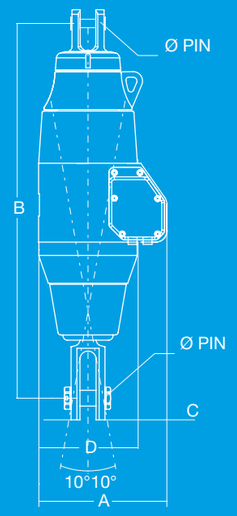

Model	A mm max	B mm	C mm	D mm
12	202	615 - 650	26	148
16	231	685 - 720	29	177
25	243	750 - 800	35	197

Model	12	16	25
Speed rpm	41 @ 20 l/min.	31 @ 20 l/min.	33 @ 20 l/min.
Pin Ø mm	19	28	-
Weight kg	30	45	60
Max Stay Working Load t	6 - 8	12	18 - 20

RLG-CODE SE (C23)
CODE SE (C24)

electric furler with spherical connection

The electric “spherical” version of RLG-CODE furlers, designed for a “structural” flush-deck installation, makes use of that special “self-aligning” construction enabling the stay to keep always the right angle.

The system is available in two different configurations:
“RollGen”, with the special stay; it allows you furl all common types of free flying asymmetric sails of standard construction.

“CODE” version (stay not supplied), instead, may be used to furl sails, such as Code Os, Drifters, etc., with luff integral to the stay.

RLG-CODE SI (C30)

hydraulic furler with spherical connection

The hydraulic “spherical” version of RLG-CODE furlers, designed for a “structural” flushdeck installation, makes use of that special “self-aligning” construction enabling the stay to keep always the right angle.

The system is available in two different configurations:
“RollGen”, with the special stay; it allows you furl all common types of free flying asymmetric sails of standard construction.

“CODE” version (stay not supplied), instead, may be used to furl sails, such as Code Os, Drifters, etc., with luff integral to the stay.

RLG-CODE SE

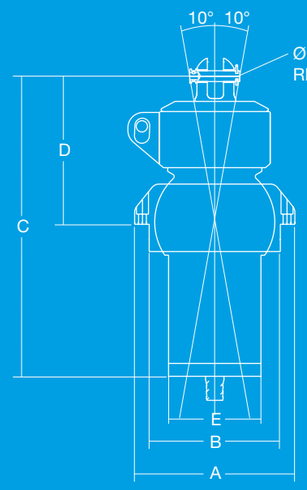

CODE SE

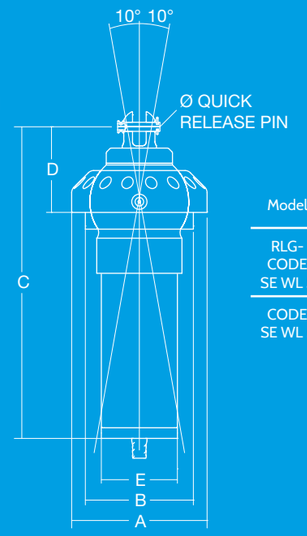

Model	A mm	B mm	C mm	D mm	E mm
RLG-CODE SE WL 5	178	142	389	172	100
CODE SE WL 5	178	142	410	112,5	100

Model	RLG-CODE SE WL 5	CODE SE WL 5
Quick Release Pin Ø mm	12	12
Speed max rpm	100	100
Weight kg	12	10,5
Max Stay Working Load t	5	5

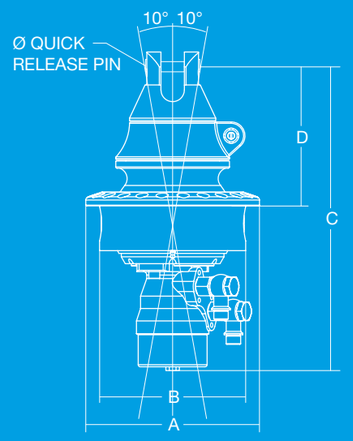

Model	A mm	B mm	C mm	D mm
RLG-CODE SI WL 8	252	212	440	223
RLG-CODE SI WL 15	252	212	442	193
RLG-CODE SI WL 20	370	305	525	248
RLG-CODE SI WL 40	490	400	845	355

Model	RLG-CODE SI WL 8	RLG-CODE SI WL 15	RLG-CODE SI WL 20	RLG-CODE SI WL 40
Quick Release Pin Ø mm	19	22	28	40
Speed max rpm	62,5 @ 10 l/min.	62 @ 10 l /min.	65 @ 10 l/min.	82 @ 20 l/min.
Weight kg	23	25	59	-
Max Stay Working Load t	8	15	20	40

Hydraulic cylinder (E20) - (E21) - (E22)

Bamar standard cylinders are manufactured with high quality materials. Rods are made from polished stainless steel type AISI 316. Tube, fork and cap are all machined from hardcote anodized aluminium. Upon demand we may supply special lengths and custom cylinders for any application.

Cylinders are single acting and are equipped with a pressure rod release. This pressure is charged through the “pneumatic” valve located on the cylinder body, opposite to the rod. Gas pressure should be regulated depending on the release speed you wish.

Pressure is charged at 100 psi (7.0 bar) approximately. Max pressure 350 bar (5000 PSI). Upon demand, all cylinders may be manufactured with double acting function (push-pull).

Cylinder accessories (E90) - (E93)

Bamar offers a wide range of cylinder terminals, for many different uses:
- stainless steel adjustable fork - it allows a minimum length adjustment
- eye-fork toggle - it is used on the lower part of the cylinder in order to prevent lateral loads.

Upon demand, we may supply fork-fork toggles and eye terminals.

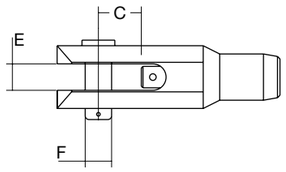

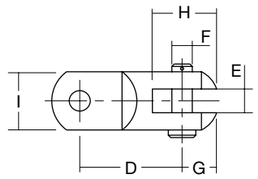

ROD #	Fork Stroke mm	C mm	D mm	E mm	Pin Ø F mm	G mm	H mm	I mm
-10	30	30	68	13	12,7	20	47	32
-12	31	36,5	70	16	15,9	23	52	38
-17	31	36,5	70	16	15,9	23	52	38
-22	35	38	82	19	19	27	62	45
-30	38	38	103	22	22,2	32	70	51
-40	40	40	111	26	25,4	35	75	57
-60	55	75	154	32	31,8	44	105	71
-90	55	71	154	35	34,6	53	110	83
-150	70	80	220	45	44,5	-	-	-

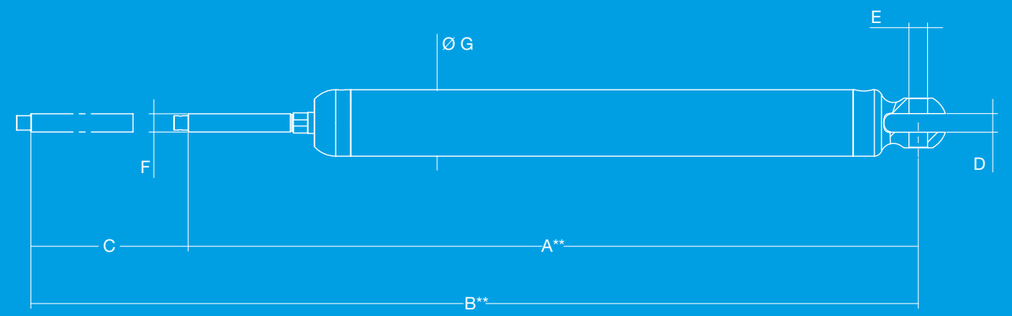

ROD #	1x19 Wire Ø mm	Working load max* kg	Body Ø G mm	Thread F mm	All Closed A ** mm	All Open B ** mm	Stroke C mm	Stroke size (***)	GAP D mm	Pin Ø E mm
-10	7	2.749	60	12,7	505	725	220	S	13	12,7
-10	7	2.749	60	12,7	620	950	330	L	13	12,7
-10	7	2.749	60	12,7	800	1.300	500	F	13	12,7
-12	8	3.508	60	15,9	545	790	245	S	16	15,9
-12	8	3.508	60	15,9	665	1.015	350	L	16	15,9
-12	8	3.508	60	15,9	930	1.530	600	F	16	15,9
-17	10	4.696	65	15,9	550	780	230	S	16	15,9
-17	10	4.696	65	15,9	690	1.040	350	L	16	15,9
-17	10	4.696	65	15,9	1.110	1.860	750	F	16	15,9
-22	12	5.566	70	19	610	840	230	S	19	19
-22	12	5.566	70	19	760	1.120	360	L	19	19
-22	12	5.566	70	19	1.280	2.150	870	F	19	19
-30	14	9.939	85	22	700	950	250	S	22	22,2
-30	14	9.939	85	22	860	1.255	395	L	22	22,2
-30	14	9.939	85	22	1.465	2.450	985	F	22	22,2
-40	16	15.185	100	25,4	760	1.030	270	S	26	25,4
-40	16	15.185	100	25,4	890	1.365	420	L	26	25,4
-40	16	15.185	100	25,4	1.645	2.750	1105	F	26	25,4
-60	22	18.981	120	31,8	905	1.185	280	S	32	31,8
-60	22	18.981	120	31,8	1.110	1.565	455	L	32	31,8
-90	26	24.227	140	31,8	1.000	1.325	325	S	38	34,6
-90	26	24.227	140	31,8	1.200	1.730	530	L	38	34,6
-150	32	41.069	180	38,1	1.091	1.520	375	S	45	44,5
-150	32	41.069	180	38,1	1.316	1.975	600	L	45	44,5

* Atm 5000 PSI (Approx 345 bar)
** Length from rod thread end to pin centre on cylinder.
*** S = Standard stroke
L = Long stroke
F = Flattener stroke

Hydraulic boom vang (E19)

Vang cylinders are equipped with a pressure rod release. Inert gas pressure is charged through a “pneumatic” valve located on the cylinder body, near to the boom-side vang terminal.

Gas pressure is to be adjusted depending both on the release speed you wish, and on the thrust needed to contrast the weight of the boom.
Pressure has to be charged indicatively at 500 psi (35 bar).
The system is equipped with a mechanical valve to exclude the gas-loading pin and grant pressure holds in time. All VANG cylinders may also be customized with double acting function (push&pull) and position sensor.

Polished s.s. bodies are available upon demand

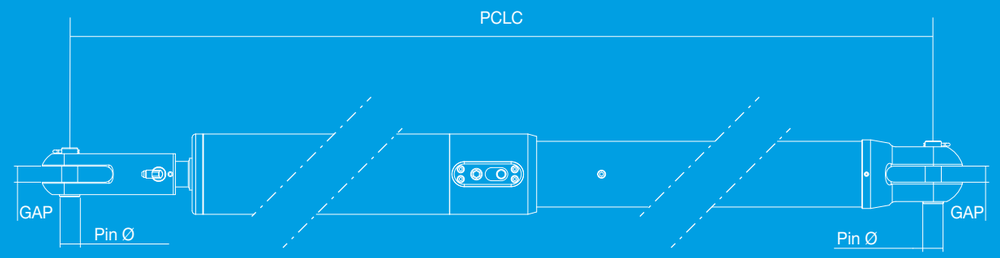

Model #	External Ø mm	Cylinder rod Ø mm	Pin Ø mm	GAP mm	Stroke mm	Cylinder max pull (1) (3) kg	Gas push (2) kg	Length max PCLC mm	Max axial compression load (Buckling) kg	Indicative weight kg
-17	65	25	16	16	300	3100	550	2000	1000	15
-22	75	30	16	16	350	4715	830	2300	1500	20
-30	90	30	19	19	350	9200	1300	2500	2000	30
-40	110	35	22	22	400	11810	1740	2700	2600	40
-60	120	40	25	25	450	14780	2200	3000	3700	60
-90	140	50	32	32	500	16760	2700	3250	5000	75
-110	155	50	35	35	500	24340	3600	3500	6000	100
-150	180	60	40	40	500	30320	4600	4100	9000	125
-195	220	70	50	50	500	47845	9900	4700	12000	170

(1) @5000 PSI ≈ 345 bar (except model -195 considered @ 3600 PSI ≈250 bar)
(2) Standard pre-charged gas push (return force) is considered @500 PSI ≈35 bar in the all open position. Max gas charging pressure 713 PSI≈50 bar (except model -195).
(3) @1/2 stroke with gas pre-charged 500 PSI ≈ 35 bar.

BPC-TRIM (E02)

hydraulic cylinder with tackle

It is a tackle system operated by a “push-pull” hydraulic cylinder. It has been designed mainly for the management of sheets (mainsail, genoa), but it may also be used for other running rigging (runner). The device is made up by a 4:1 tackle allowing to stow a quantity of line that is four times longer than the cylinder stroke.

The anchoring method is simple and fast: two pins, one holding the load, the other one supporting the system, that are positioned on the two extremities of the self-holding structure. This spares both boom maker and boat yard the construction of a complex structure.

BPC-TRIM may be housed either inside the boom or in a dedicated technical compartment. The system is controlled by an electric hydraulic power-pack to be customized. All BPC-TRIM cylinders are also available in the “flat” version.

EXAMPLE OF MAINSHEET APPLICATION

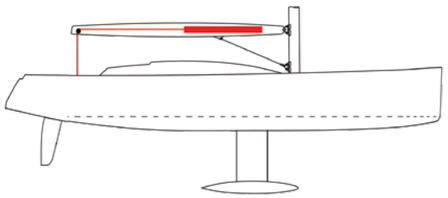

A - inside the boom

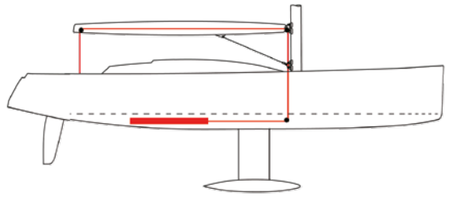

B - under the boards with sheet passage from mast foot

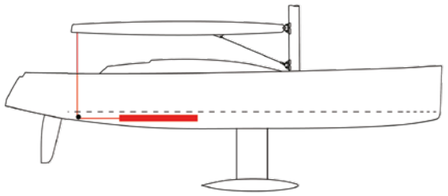

C - under the boards with sheet passage from deck

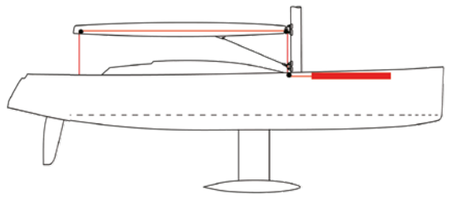

D - below deck with sheet passage from mast foot

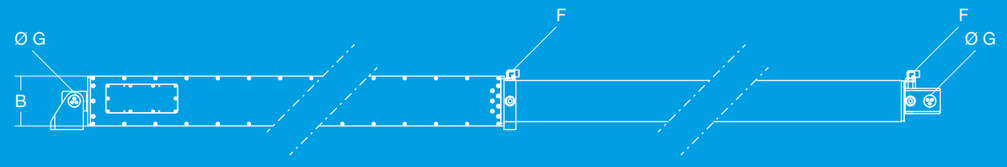

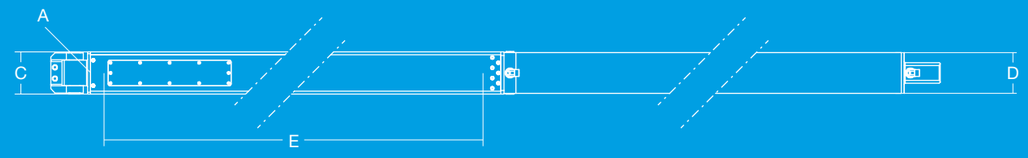

Model	Line max Ø A mm	Tackle box dimensions B x C mm	Piston external Ø D mm	Piston Max stroke E mm	Oil intake thread F	Anchoring pins Ø G mm
100	12	100 x 100	90	2000	3/8”	25
120	14	120 x 120	100	2500	1/2”	30
150	18	150 x 150	140	2500	3/4”	35
200	22	200 x 200	180	3800	1”	45
250	24	250 x 250	225	4500	1”	45
300	26	300 x 300	270	5000	1 1/4”	50

Model	100	120	150	200	250	300
1:1 Exit pull at 220 bar* kg	1476	1900	3031	6070	8145	12000
Cylinder pull @ 220 bar kg	7380	9500	15155	31090	42000	64000
Sheave Ø mm	85	105	125	170	210	260

* Max working pressure 220 bar

BSCP (E03)

cylinder with spherical fulcrum

It is an innovative evolution of the standard hydraulic cylinder. It makes use of a special spherical anchoring system to be fitted on the boat's walls. Easy to install and waterproof, it may solve several dimensional problems.

It can be operated either through the boat's hydraulic power-pack, or through a mini hydraulic power-pack. Applications: aft lockers, lifting platforms, garage lockers, etc...

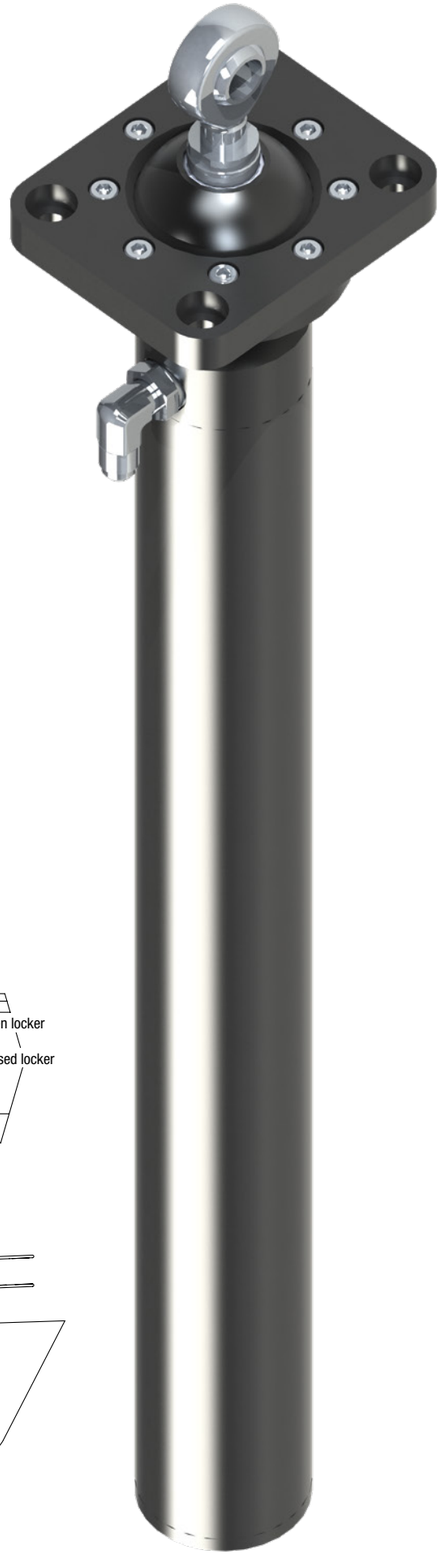

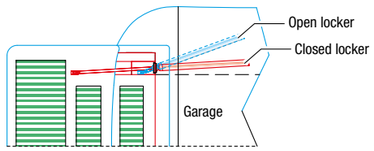

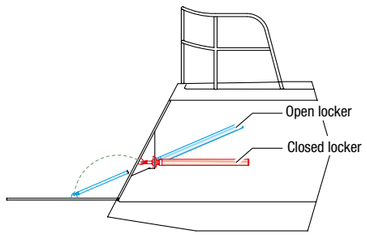

Aft locker - sun bathing area

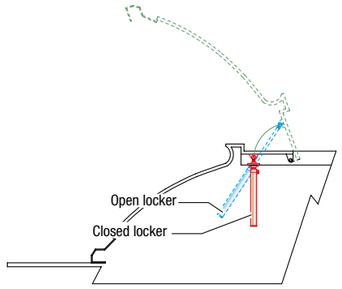

Garage Locker

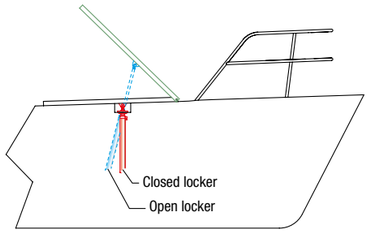

Forepeak hatch

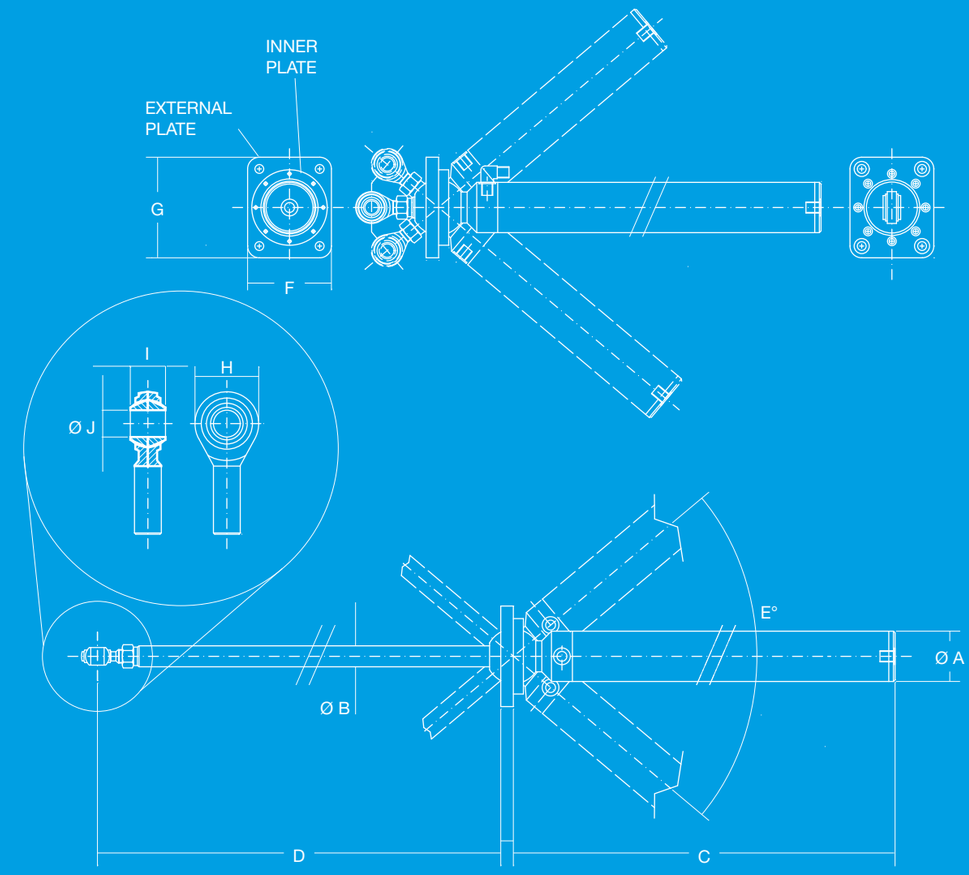

Model	Ø A mm	Ø B mm	C mm	D mm	E° deg	F mm	G mm	H mm	I mm	Ø J mm
400	60	25	600	466	80	100	120	38	21	16
600	60	25	800	660	80	100	120	38	21	16
800	60	25	1000	865	80	100	120	38	21	16

Model	400	600	800
Flange dimensions FxG (mm)	100x120		
Max pull at 350 bar (kg)	2860		
Pull at 50 bar (kg)	375		
Opening speed ø 5 l/min. (s)	12		
Weight kg	4,85	7,2	9
Stroke mm	400	600	800

BSCT (E04)

hydraulic stay tensioning cylinder with spherical fulcrum

An innovative evolution of the “classical” hydraulic stay tensioning cylinder.
It makes use of a special spherical connection on deck
which allows for the correct alignment of the stay. Moreover, the system
keeps the cylinder body water-tight below deck, thus reducing the overall
dimensions of the parts exposed on deck.
Mainly indicated for inner forestays and backstays.

These cylinders are supplied with pressure rod release. Such pressure is
charged with a pneumatic valve placed on the cylinder body at the extremity
opposite to the rod to be adjusted. Pressure depends on the release speed
required.

We may supply custom lengths and strokes on demand.

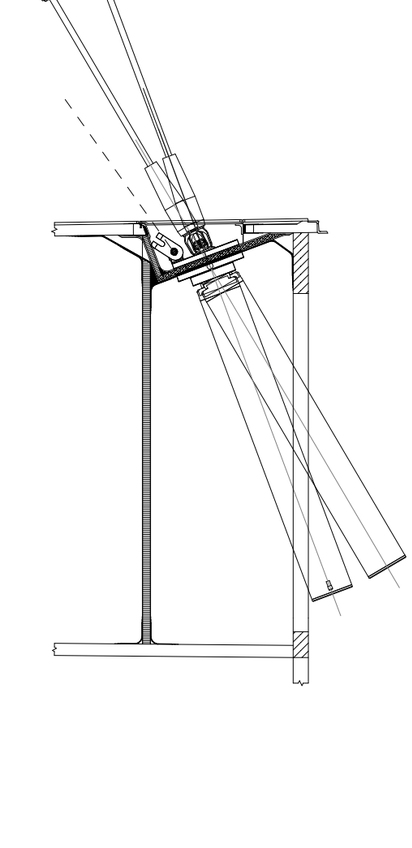

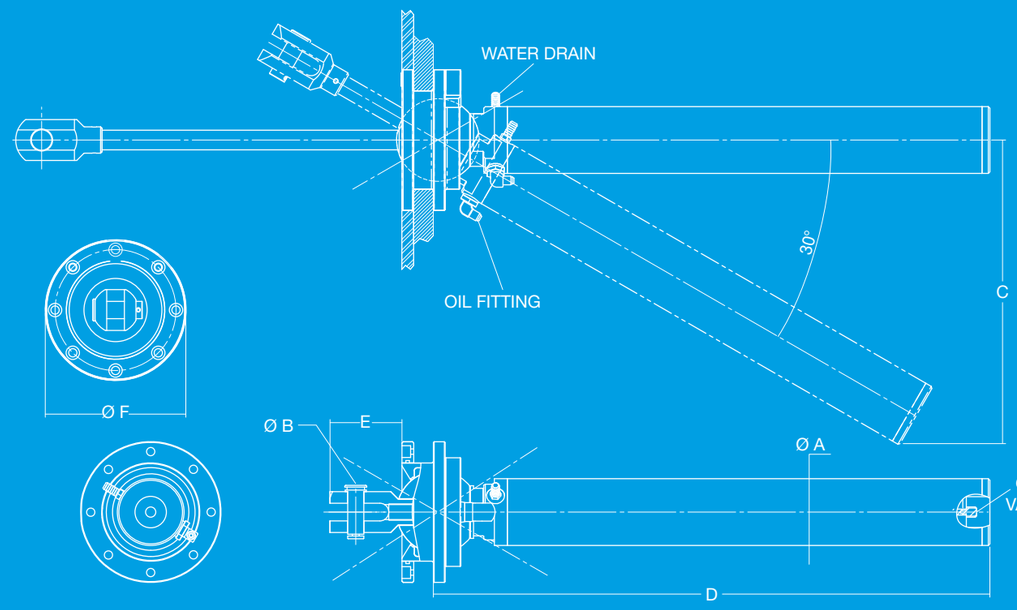

1x19 Wire Ø mm	Ø A mm	Ø B mm	C mm	D mm	E mm	Ø F mm
12	70	19	375	731	78	160
14	85	22,2	387	709	92	179
16	105	26	474	972	74	209
19	120	31,5	580	1067	151	211
26	140 - 150	38	-	-	-	230 - 250
32	180	44,5	674	1206	204	320

1x19 Wire Ø mm	12	14	16	19	26	32
Rod #	-22	-30	-48	-60	-90	-150
Working load max* kg	5556	9939	15185	18981	24227	47000
Cylinder Rod Ø mm	22	25	30	35	35 - 40	50
Stroke mm	400					

*Max pressure 5000 PSI (roughly 345 bar).

BCPO (E07)

hydraulic outhaul cylinder

Single acting pushing cylinders allowing for the immediate control of the mainsail base. Such system is more efficient and smaller than the classical pulling cylinder to be housed inside the boom with a pulley fitted abaft. The cylinder body is made of black hard-cote anodized aluminium.

The rod is made of stainless steel and has a bigger diameter in order to prevent it from bending when pushing.

The cylinder will have to work with the car sliding on a track.

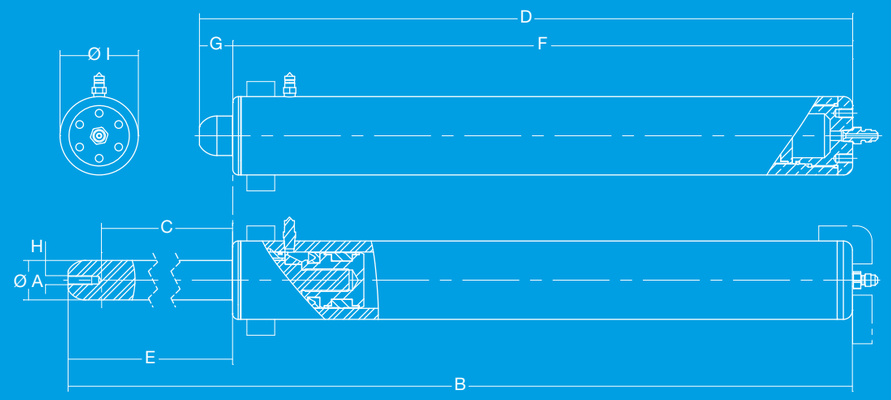

Rod #	Max push @ 345 bar kg	Ø A mm	Length all Open B mm	Cylinder stroke C mm	Length all Closed D mm	E mm	F mm	G mm	H	Ø I mm
-30	6643	35	960	380	580	410	550	30	M8	70

BCBM (E30)

hydraulic cylinder with mechanical lock

A new line of stay tensioning cylinders supplied with a mechanical lock.
They allow for the hydraulic pressure release, while keeping the stay under tension mechanically: fundamental for maximum safety when sailing for long distances.
Useful for the control of forestays during races, thanks to their simple and quick adjustment system with ring nut.

The cylinders are supplied with pressure rod release. This pressure is charged through the “pneumatic” valve located on the cylinder body, opposite to the rod.
Gas pressure should be regulated depending on the release speed you wish.
Pressure is charged at 100 psi (7.0 bar) approximately.

Upon request we may manufacture fork-shaped lower fittings.

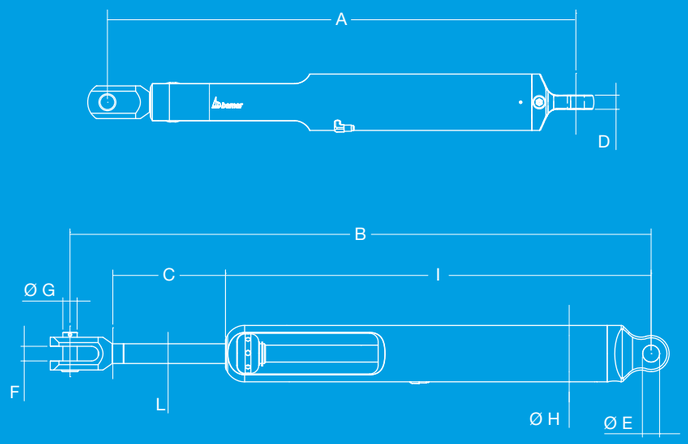

Rod #	Working Load max kg	All Closed A mm	All Open B mm	Stroke C mm	D mm	Ø E mm	F mm	Ø G mm	Ø H mm	I mm
-40	15.185	832	1032	200	25	26	26	25,4	100	733
-60	18.861	880	1080	200	31	32	32	31,8	115	778

Upon request we may supply custom lengths and strokes.

BHP (E10)

single function or multifunction hydraulic panel

Bamar Hydraulic Panel is a hand pump supplied with gauge, release valve and 4-function selector knob (only for multi-function devices), for easy and quick control of cylinders on board.

A 4-position selector that allows for a quick and safe use even in worst conditions characterizes function selection
The system is provided with a pressure gauge, which makes pressure reading easy and fast.
For plants with more than 4 functions, we may supply an optional selector extending the BHP panel to a maximum of 7 functions.

Moreover, it is supplied with a pressure relief valve to protect the boat's hydraulic plant (max pressure 345 Bar – 5000 PSI).
The pump is centred on the lower part of the panel, in order to give a better mechanical advantage and less physical effort.

BHP is available with a single speed pump and offers a double speed auto-shift pump as an option. The latter triples the oil flow at low pressure for a quick take-up and then automatically moves to a slower speed when pressure gets to a preset level.

High flow valves and ports allow panels to be easily interfaced with any hydraulic power pack. Oil flow supplied by the hydraulic power pack is controlled through the BHP system. Fine tuning at high pressure can be completed with the hand pump.

The single function panel can be later converted into multifunction panel with the 4 function conversion unit.

A small single function panel is also available. It may be used for single functions such as:
- Forestay
- Backstay

BHP hydraulic panel kit includes:
- stainless steel or aluminium panel
- 4-way selector (on multifunction models)
- stainless steel lever
- reservoir
- filter
- pressure gauge
- 4 m low pressure plant hose and clamps

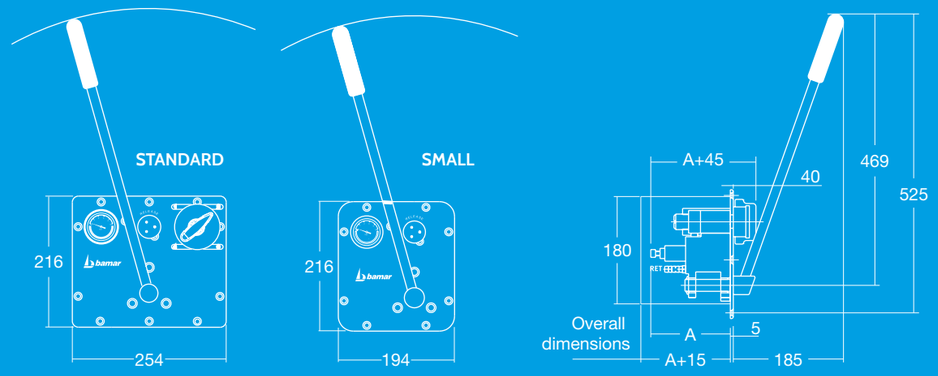

Model	A mm
1-speed 1 function pump	106
1-speed multi-function pump	118
2-speed 1 function pump	135
2-speed multi-function pump	135

EXTRA 4-FUNCTION SELECTOR

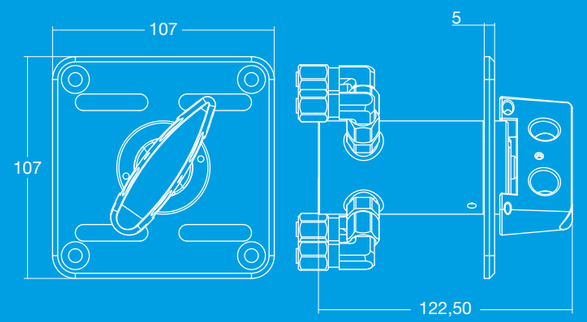

Function	1	1	1	4 (Multi)	4 (Multi)
Speed	1 - 2	1 - 2	1 - 2	1 - 2	1 - 2
Panel	aluminium small*	aluminium	s.s.	aluminium	s.s.
Weight kg	3,2	3,8	4,8	4,9	5,9

* Single function BHP systems with small panel cannot be transformed into multi-function systems

Quick Release (E96)

pressure release switch

It is a pressure release valve usually combined with the hydraulic boom vang circuit. A foot switch made in anodized aluminium which controls a release valve.

To be positioned beside the wheelhouse, it is designed to pass through the deck. When you press it, it immediately releases the function (e.g. boom vang) without having to press the release valve on the BHP panel. .

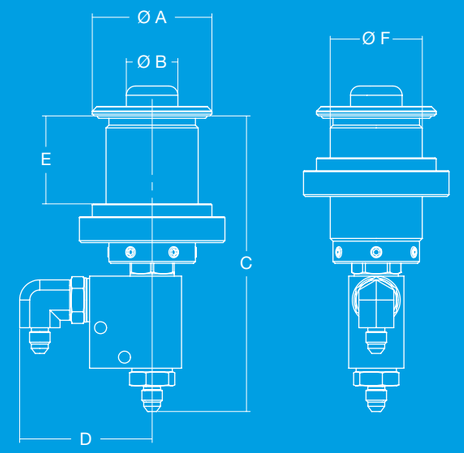

Ø A mm	Ø B mm	C mm	D mm	E mm	Ø F mm
65	28	160,50	72	45	50

Vang (G10)

kicker with mechanical spring

It is supplied with an internal steel spring that pushes the boom up.
The range is made up by 5 models in order to be fitted on boats from 30' to 62'.

Its length may be customized onboard when installing it.

This kicker is manufactured in either silver or black anodized aluminum alloy. It is made of two telescopic tubes equipped with special connecting terminals with integrated pulleys that allow for a compact line tackle. The line can be either directed to the cockpit or locked onto the kicker itself by means of an extra tackle with cleat.

The spring allows you to adjust the kicker thrust by rotating the upper tube/ terminal.

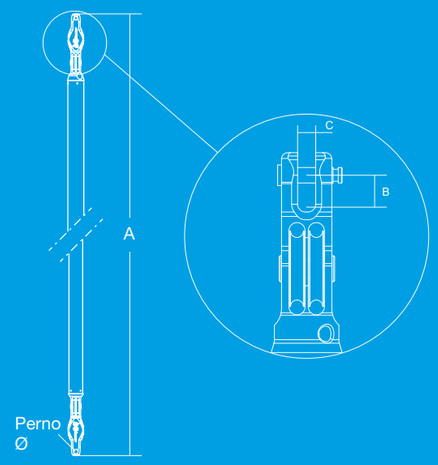

Model	A mm max	B mm	C mm	Pin Ø mm
100	1600	20	12	10
200	2000	22,5	14	12
300S	2500	39,5	18	14
300	2500	39,5	18	14
400	2500	40,5	18	14
500	2650	40,5	18	14

Model	100	200	300S	300	400	500
Weight kg	3	6	9,5	11,5	12,5	19
Boat length ft	30'-34'	35'-44'	42'-52'	50'-55'	54'-56'	57'-62'

BTM (F10)

mechanical stay adjuster

BTM winch handle stay tensioners are available in several sizes. They are made for either 1x19 wire stays from Ø 8 to 22 mm or rod equivalent.

The mechanism can be operated by means of a standard winch handle thanks to an
octagonal clutch.

BTM stay tensioners body is manufactured in black HARDCOTE anodized aluminum;
whereas studs and forks are made in s.s.. Double extension studs allow for a longer
stroke compared to comparable products.

Furthermore, we may supply a range of quick release pins for either inner forestay
tensioners or standing rigging that need to be “running” with a simple operation.

\+ It can be operated thanks to an octagonal clutch (standard winch handle)

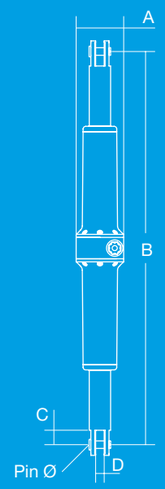

Model	A mm	B Max mm	B Min mm	C mm	D mm	Stroke mm
8 / 10	89	898	598	27	16	300
12	89	948	648	35	20	300
14	89	1168	768	47	22	400
14M	110	1445	939	47	22	506
16	110	1445	939	70	26	506
19	110	1445	939	88	29	506
22	110	1465	939	115	35	506

Model	8	10	12	14	14M	16	19	22
ROD #	12	17	22	30	30	40	48	60
Pin Ø mm	14	16	19	22	22	25	28	35
Wire 1x19 mm	8	10	12	14	14	16	19	22
Working load max t	4,4	5	7	8,5	9,6	12,5	16	20,4

* Max holding load no dynamic load.

BTV (F10)

handwheel mechanical stay adjuster

Handwheel stay adjusters are equipped with two foldable arms. They are available in two sizes, for size 5 and 6 mm stays.

Thanks to self-lubricating bushings, we manage to reduce to a minimum the friction that would be created by sliding the endless screw on the trapezoidal thread, which allows high axial loads.

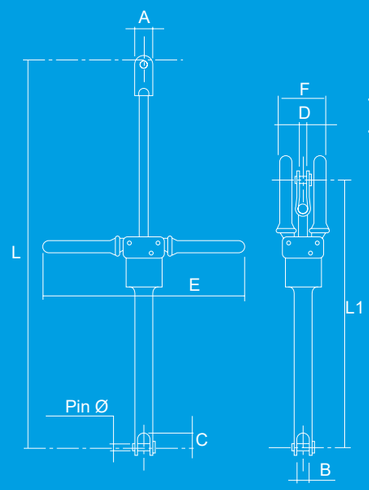

Model	A mm	B mm	C mm	D mm	E mm	F mm	L max mm	L1 min mm
5	20	16	33	13	280	65	420	280
6	25	16	35	14	280	65	530	330

Model	5	6
Wire Ø mm	5	6
Working load kg	1500	2300
Breaking load kg	3000	4800
Pin Ø mm	8	10

RGEM (A10)

manual external mainsail furler

It is characterized by the famous “worm screw” coil drive that grants a correct stowage of the furling line avoiding all possible overlaps while furling. The coil drive is made of silver anodized aluminium machined with CNC machines, and integrates a ball bearing bush protected by seals and ORs.

Another important mechanical component is the halyard swivel that connects the halyard to the sail. It is made of silver anodised aluminium machined with CNC machines, and rotates on ball bearings protected by seals and ORs that grant its tightness.

- The manual external mainsail furler kit includes:
- sail stowing foils
- furling foils and connectors
- halyard swivel
- terminal fitting
- gooseneck connecting the boom to the mast
- “worm screw” coil drive with furling line
- screws and rivets
- boom modification: track with terminals, screws and fixing plates, cars running on ball bearings, three blocks to take the line down to the mast foot

Model	BA70	BA80	C	D	E
RGE Foil					
E max m*	3,2*	4,2*	5,7*	6,7*	10,0*
P max m	13	15,5	18	20,5	30
Internal Diameter mm	70	80	90	105	150
Foil length m (indicative)	2,5	2,5	2,5 / 3	2,5	3
Weight kg/m	1,72	2,7	3,3	4,18	6,1
Car breaking load kg	600	1.000	1.600	3.000	depending on measure
Sail g/mq (indicative)	≤ 281	≤ 323	≤ 365	≤ 398	depending on measure
Motorization Model	Manual	80 / Manual	80 / Manual	80 / Manual	130

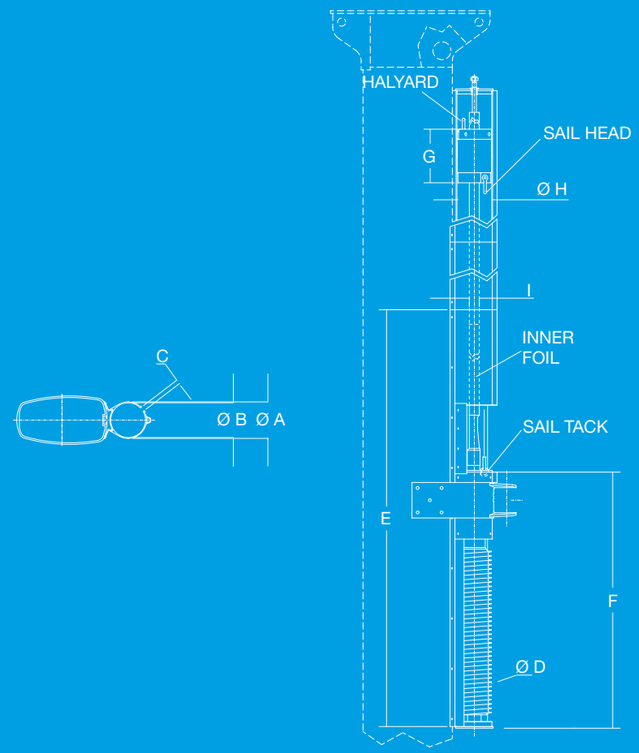

Model	BA70	BA80	C	D	E
Max E* m	3,2	4,2	5,7	6,7	10
Max P m	13	15,5	18	20,5	30
Ø A mm	74	84	94	110	158
Ø B mm	70	80	90	105	150
C mm	10	10	13	13	22
Ø D mm	8	8	10	10	12
E mm	995	1065	1095	1.255	1.500
F mm	505	575	610	765	1000
G mm	135	150	150	160	140
Ø H mm	68	77	88	103	147
I (inner foil type)	BMG 30T	BMG 30T	BMG 30T	BMG 30T	BMG 52
Halyard swivel kg	1	1,5	2	3	4,5
Inner foil kg/m	0,62	0,62	0,62	0,62	1,77
External foil kg/m	1,72	2,7	3,3	4,18	6,1
Coil drive kg	4	5	6	12	16

* Data expressed are indicative and need to be checked with the sail-maker depending on cut, cloth and thickness of the sail.

RGEEL (A12)

electric external mainsail furler

External electric mainsail furler to be fitted onto the existing mast. It is supplied with a motorization that replaces the classic manual “worm screw” coil drive. This solution allows you to reef, furl and unfurl the sail by simply pushing a button.

Both the external foils that stow the sail and the internal ones on which the sail furls are the same as the ones used on the manual system. The motorization has a cylindrical shape and is available for either 12 or 24 Volts installations. Its consumption is extremely low, as we use permanent magnet motors with a high efficiency epicyclical transmission.

Reefing is guaranteed by the integrated electromagnetic brake. Moreover, the motorization is supplied with a manual emergency clutch to be used with a standard winch handle, should the electric system fail.
If required, we may motorize existing furling devices keeping original furling foils and halyard swivel.

The external electric mainsail furler kit includes:
- sail stowing foils
- furling foils and connectors
- halyard swivel
- terminal fitting
- goose-neck connecting the boom to the mast
- electric motorization
- screws and rivets
- boom modification: track with terminals, screws and fixing plates, cars running on ball bearings
- 5 m long electric cables

Model	BA70	BA80	C	D	E
RGE Foil					
E max m*	3,2*	4,2*	5,7*	6,7*	10,0*
P max m	13	15,5	18	20,5	30
Internal Diameter mm	70	80	90	105	150
Foil length m (indicative)	2,5	2,5	2,5 / 3	2,5	3
Weight kg/m	1,72	2,7	3,3	4,18	6,1
Car breaking load kg	600	1.000	1.600	3.000	depending on measure
Sail g/mq (indicative)	≤ 281	≤ 323	≤ 365	≤ 398	depending on measure
Motorization Model	Manual	80 / Manual	80 / Manual	80 / Manual	130

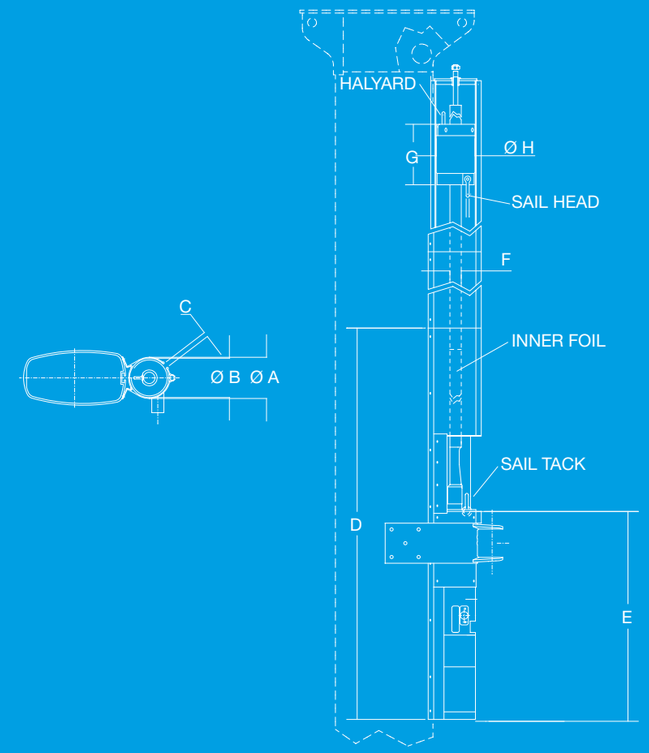

Model	BA80	C	D	E
Max E* m	4,2	5,7	6,7	10
Max P m	15,5	18	20,5	30
Ø A mm	84	94	110	157
Ø B mm	80	90	105	150
C mm	10	13	13	20
D mm	1045	1045	1045	6500
E mm	570	570	570	777
F (inner foil type)	BMG 30T	BMG 30T	BMG 30T	BMG 52
G mm	150	150	160	140
Ø H mm	77	88	103	147
Halyard swivel kg	1,5	2	3	4,5
Inner foil kg/m	0,62	0,62	0,62	1,77
External foil kg/m	2,7	3,3	4,18	6,1
Motorization kg	9,5	11	13	35
Motorization Model	80	80	80	130

* Data expressed are indicative and need to be checked with the sail-maker depending on cut, cloth and thickness of the sail.

RGIM (A20)

manual in-mast mainsail furler

Mainsail furling mechanism to be fitted inside mast foils with special section for vertical internal mainsail furler. It is characterized by the famous “worm screw” coil drive that grants a correct stowage of the sail furling line, avoiding all possible overlaps while furling. The coil drive is made of silver anodized aluminium, machined with CNC machines, and integrates a ball bearing bush protected by seals. Another important mechanical component is the halyard swivel that connects the halyard to the sail. It is made of silver anodized aluminium machined with CNC machines, and rotates on ball bearings protected by seals that grant its tightness.

- The manual in-mast mainsail furler kit includes:
- furling foils and connectors
- terminal fitting
- halyard swivel
- “worm screw” coil drive with furling line

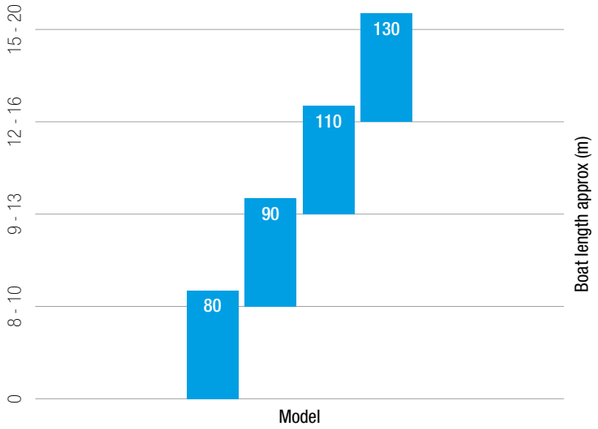

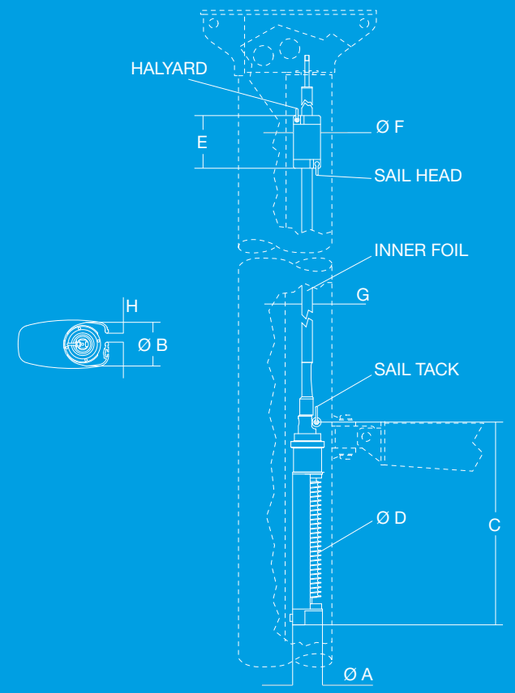

Model	80	90	110	130
Max E** m	5	6	7	8
Max P m	15	17,5	20	25
Ø A mm	85	95	112	130
*Ø B min mm	100	120	140	150
C mm	577	647	803	830
Ø D mm	8	10	10	12
Ø Cima mm	14	18	22	26
E mm	150	150	160	140
Ø F mm	77	88	103	104
G (inner foil type)	BMG 30T	BMG 30T	BMG 30T	BMG 52
Halyard swivel kg	1,5	2	3	2
Inner foil kg/m	0,62	0,62	0,62	1,77
Coil drive kg	5	6	12	18
H mm	Warning: the width of the sail exit on the mast must not exceed measure“D”			

* to be custom made
** Data expressed are indicative and need to be checked with the sail-maker depending on cut, cloth and thickness of the sail.

RGIEL (A22)

electric in-mast mainsail furler

Mainsail furling mechanism to be fitted inside mast foils with special section for vertical internal mainsail furler. It is supplied with a motorization that replaces the manual “worm screw” coil drive. This solution allows you to reef, furl and unfurl the mainsail by pushing a switch from the cockpit. If required, we may motorize existing furling masts keeping original furling foils and halyard swivel.

The electric in-mast mainsail furler kit includes:
- furling foils and connectors
- terminal fitting
- halyard swivel
- electric motorization
- anti-rotation bush

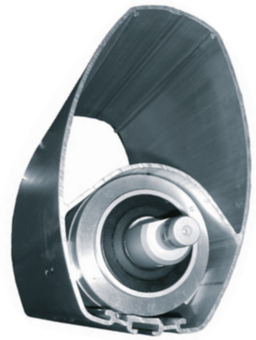

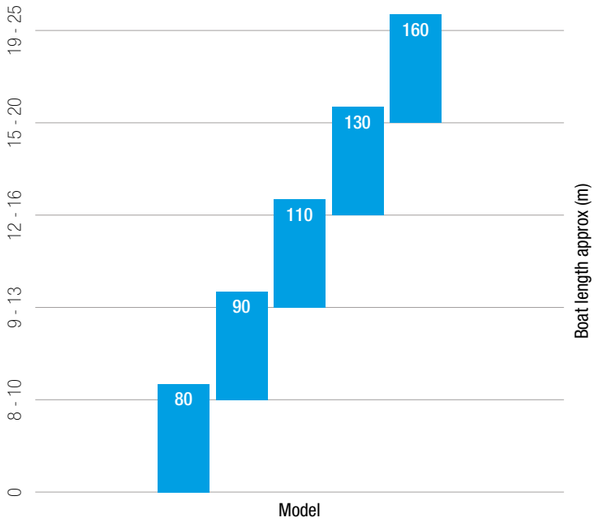

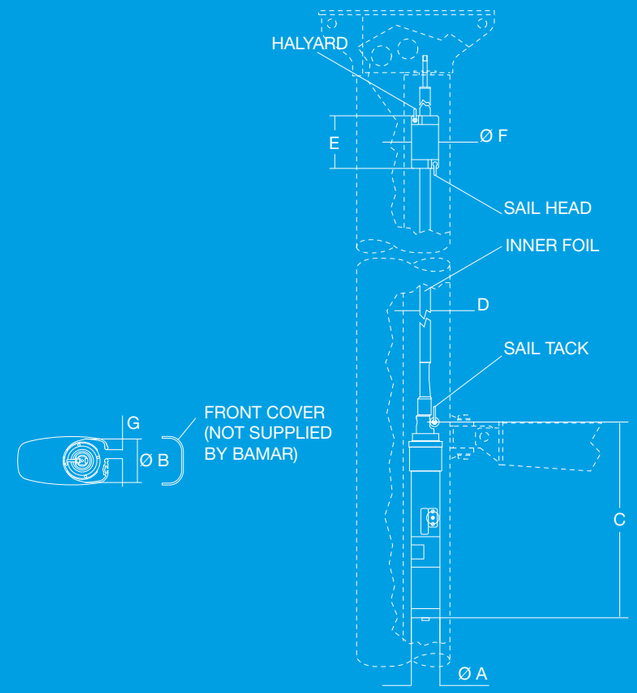

Model	80	90	110	130	160
Max E** m	5	6	7	9	11
Max P m	15	17,5	20	25	30
Ø A mm	80	80	110	130	160
*Ø B min mm	110/90***	110/90***	115/120***	197/140***	200/170***
C mm	570	570	660	780	875
D (furling foil type)	BMG 30T	BMG 30T	BMG 30T	BMG 52	BMG 60
E mm	150	150	160	140	165
Ø F mm	77	88	103	104	118
Halyard swivel kg	1,5	2	3	2	2,5
Foil kg/m	0,62	0,62	0,62	1,77	2,44
Motorization kg	9,5	11	13	35	55
G mm	Warning: the width of the sail exit on the mast must not exceed measure “D”				

* To be customized
** Data expressed are indicative and need to be checked with the sail-maker depending on the cut, cloth and thickness of the sail, and maximum working loads
*** If fitted on front cover

RGI (A60) - RGEL (A50)

TBI (A61) - TBEL (A51)

“combined” mainsail motorization and outhaul

Such motorizations make use of a worm screw as reduction system and may be realized both in the electric and hydraulic version. Mainsail furlers and outhauls may be installed both on furling masts, and on new or existing external retrofit mainsail systems. The range of mainsail furlers and outhauls is composed by 4 + 4 models that may reef mainsails with a sail area between 30 and 240 sq.m.

“Comby system” is the system that combines mainsail motorization and outhaul.
It allows you to furl and unfurl the mainsail with the almost contemporaneous operation of the two motorizations. Everything controlled from the cockpit.

RGI - RGEL

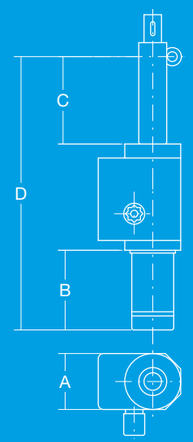

TBI - TBEL

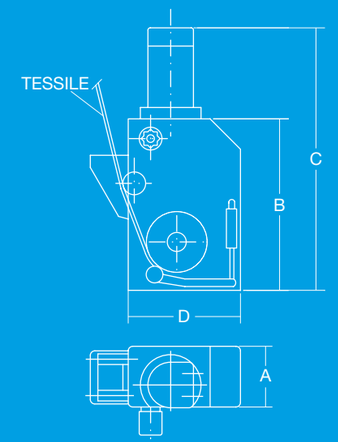

Model	RGI				TBI			
	65	95	150	240	65	95	150	240
Indicative max sail area sqm	65	95	150	240	65	95	150	240
A mm	110	140	160	180	110	140	160	180
B mm	125	125	178	178	290	355	440	520
C mm	230	230	300 / 600	300 / 1200	415	480	620	700
D mm	520	533	n.d.	n.d.	180	215	265	340
Weight kg	12	25	52	80	15	26	65	90

Model	RGEL				TBEL			
	65	95	150	240	65	95	150	240
Indicative max sail area sqm	65	95	150	240	65	95	150	240
A mm	110	140	160	180	110	140	160	180
B mm	370	480	490 / 580	540 / 700	290	355	440	520
C mm	230	230	300 / 600	300 / 1200	520 / 720	607/ 807	980	1060 / 1220
D mm	625	661	n.d.	n.d.	180	215	265	350
Weight kg	16	33	65	98	18	34	78	108

Electric and Hydraulic Captive Winches with line front output (P31) - (P01)

Quality and technological innovation are the key points upon which Bamar products manufacturing process is based.
A series of line stowing devices with line front output, for the control of sheets and halyards, for sailing yachts from 45' to over 150'
Main characteristics of these Captive Winches are:
- Reduced weight and overall dimensions thanks to the use of materials with high mechanical resistance and suitable for the use in marine environment
- Simple and flexible installation.
- Safety:
  - Mechanical control system preventing the sheet from slackening when easing away
  - Protection cowl.
  - Line always accompanied when furling in, thanks to the drum crests that guide the car movement
  - Car "stroke end" control device
- Aluminium treated with hardcote anodizing

All our Captive Winches are tested in our work shop on a test bench at maximum dynamic pull.

1t and 2t Series

	Description
1	Aluminium basement
2	Slack sheet control device
3	Aluminium drum
4	Saddle guiding studs
5	Line guiding saddle
6	Slack sheet control stud
7	Structural spacer bars
8	Aluminium side pillar
9	Electric or hydraulic motorization
10	Manual emergency clutch
11	Captive winch anchoring screws
12	Saddle limit switch sensor
13	Protection cowl

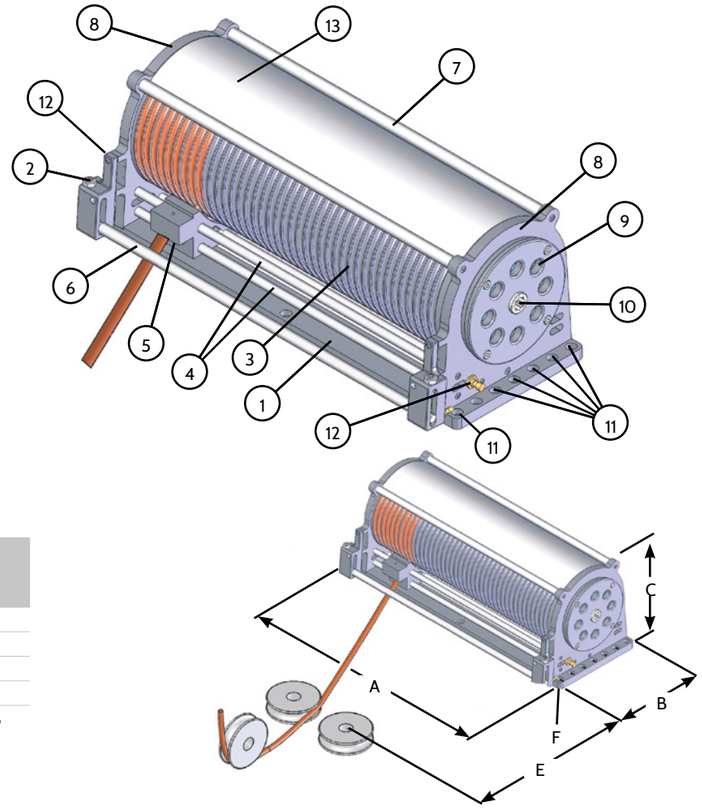

Model	BCW 1 Medium mm	BCW 2 Small mm	BCW 2 Medium mm
A	710	750	850
B	220	270	270
C	240	290	290
E min.	1250	1300	1300
F	M8 x n°.14	M10 x n°.16	M10 x n°.16

General specs

Model		BCWE 1 Medium	BCWE 2 Small	BCWE 2 Medium	BCWH 1 Medium	BCWH 2 Small	BCWH 2 Medium
Dynamic pull max	t	1	2	2	1	2	2
Static load max	t	2	4	4	2	4	4
Line Ø max	mm	10	12	12	10	12	12
Drum stowing capacity	m	24	25	30	24	25	30
Approx. Line speed *	m/min	15	15	15	18	18	18
Weight	kg	65	95	100	65	95	100
Electric motor power	Watt	1500	2000	2000	-	-	-
Electri supply	V	24	24	24	-	-	-
Pressure max	bar	-	-	-	140 - 175	140 - 175	140 - 175

Upon demand we may supply bigger sizes with higher loads.
*to be defined depending on client's requirements.

All hydraulic and electric captive winches may be equipped (upon specific request) with other motor/reduction gear configurations in order to reach variable speeds up to 40-50 m/min.
Technical specs and illustrations are indicative and not binding.

5t and 9t Series

	Description
1	Aluminium basement
2	Slack sheet control device
3	Aluminium drum
4	Saddle guiding studs
5	Line guiding saddle
6	Structural spacer bars
7	Aluminium side pillar
8	Electric motorization
9	Hydraulic motorization
10	Captive winch anchoring screws
11	Saddle limit switch sensor
12	Protection cowl

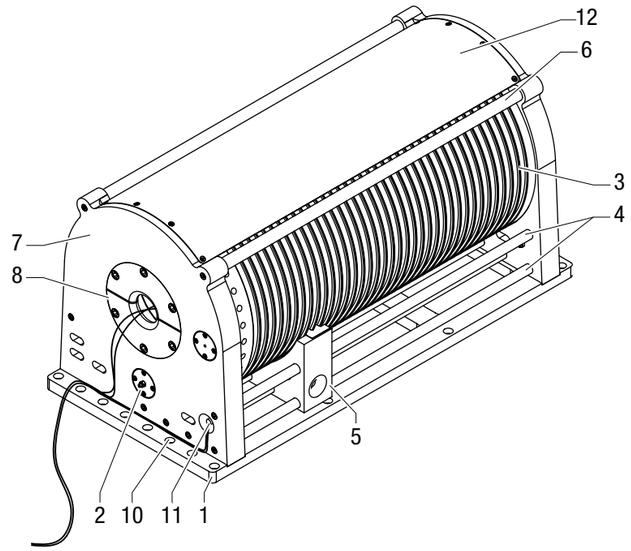

Model	A mm	B mm	C mm	D mm	E mm
BCWE 5 Small	975	450	490	1500	M16 x n°. 18
BCWE 5 Medium	1156	45	490	1500	M16 x n°. 18
BCWE 9 Small	1086	520	585	1500	M16 x n°. 20
BCWE 9 Medium	1260	520	585	1500	M16 x n°. 20
BCWH 5 Small	975	450	490	1500	M16 x n°. 18
BCWH 5 Medium	1156	450	490	1500	M16 x n°. 18
BCWH 9 Small	1086	520	585	1500	M16 x n°. 20
BCWH 9 Medium	1260	520	585	1500	M16 x n°. 20

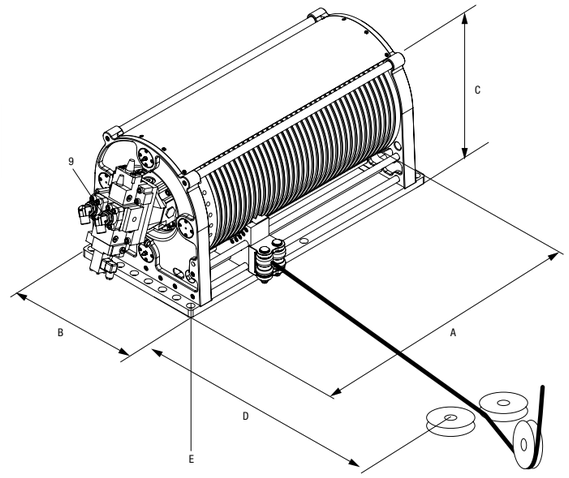

Model		BCWE 5 Small	BCWE 5 Medium	BCWE 9 Small	BCWE 9 Medium	BCWH 5 Small	BCWH 5 Medium	BCWH 9 Small	BCWH 9 Medium
Dynamic pull max	t	4 - 5	4 - 5	8 - 9	8 - 9	4 - 5	4 - 5	8 - 9	8 - 9
Static load max	t	8	8	16 - 18	16 - 18	8 - 9	8 - 9	16 - 18	16 - 18
Line Ø max	mm	16	16	20	20	16	16	20	20
Drum stowing capacity	m	40	50	48	62	40	50	48	62
Approx. Line speed*	m/min	15	15	15	15	15-30-45	15-30-45	15-30-45	15-30-45
Weight	kg	275	290	390	410	275	290	390	410
Electric motor power	kw	6 - 8	6 - 8	8 - 13	8 - 13	-	-		
Electric supply	V	380 - 400	380 - 400	380 - 400	380 - 400	-	-		
Pressure max	bar	-	-	-	-	235-250	235-250	250-270	250-270

*to be defined depending on client's requirements.

All hydraulic and electric winches may be equipped (upon specific request) with other motor/reduction gear configurations in order to reach variable speeds up to 40-50 m/min.

Electric and Hydraulic captive winches with line side output (P31) - (P01)

Quality and technological innovation are the key points upon which Bamar products manufacturing process is based.

A series of line stowing devices with line side output, for the control of sheets and halyards, for sailing yachts from 70' to 450'
Main characteristics of this line of Captive Winches with pull loads ranging from 4,000, 8,000, 16,000, 24,000, to 34,000 kg:
- Flexible positioning, since the same BCW may be positioned with sheet exit either on the left or on the right hand side, and with horizontal sheave integrated in the winch.
- Sheet tension controlled when "easing", thus preventing the sheet from slackening on the drum.
- Materials used: polished stainless steel and hardcote anodized aluminium.
- Safety: the BCW is protected by a protection cowl.
- Stroke end protection for car/sheave sheet-in/ease.
- The base-plate may be positioned on an inclined or vertical surface.

BCW's are fitted with belt drive. They are also equipped with high efficiency Epicyclic reduction gears.
Mechanisms may be either hydraulically or electrically motorized. For the electric version, voltage is 220-380V for the entire range, apart from BCW4 models, which require a 24 Volt electric supply. We use fixed speed motors (variable speed available on demand). BCW's are equipped with n. 2+2 stroke-end safety micro-switches. They are also supplied with an Electric sheet tension control device when easing, which prevents the sheet from slackening on the drum (standard supply). BCW's may mount a load cell to monitor the loads on the sheet (not included, only upon demand). This cell will release a signal that may be used by your sail monitoring system. BCW's are equipped with hydraulic fittings, and/or electric connectors, electric cables, electric junction box (box with terminals for the connection of signals) to be linked to the client's monitoring system. All our Captive Winches are tested in our work shop on a test bench at maximum dynamic pull.

Sheet PAY OFF UNIT (not included)

Electrically and/or hydraulically driven sheave, used to help the transfer of line to the deck.
The placement and installation of these sheaves is up to the shipyard that will have to install them onboard checking the best route for each line.

Our premises test bench (Forlì Italy)

	Description
1	Aluminium base (Hardcote anodized)
2	Aluminium side pillar (Hardcote anodized)
3	Aluminium side pillar (Hardcote anodized)
4	S.s. drum
5	Car guiding worm screw (N. 2)
6	Car with vertical pulley support hub
7	Rh vertical pulley support hub for BCW
8	Lh vertical pulley for BCW
9	Lh horizontal line organiser for BCW
10	Belt, chain, or gear drive
11	Hydraulic or electric motorization
12	Line clamp
13	Lh horizontal line organiser housing for BCW
14	Car anchoring track (N. 2)
15	Side pillar spacing bars
16	Drive protection cowl
17	Side protection cowls (N. 2)
18	Upper protection cowl

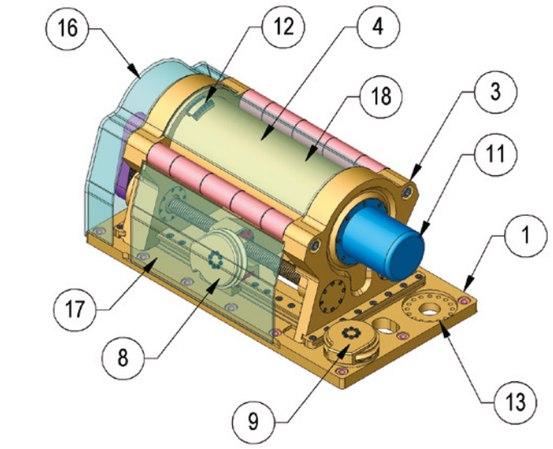

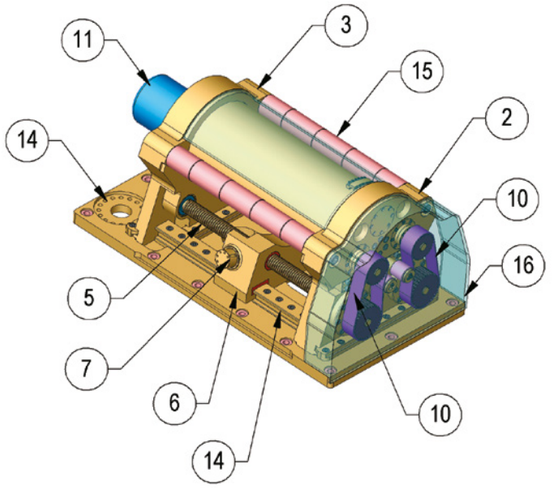

BCW 4	Drum stowing capacity m				
Line Ø mm	10	12	14	16	18
Small	25,0	21,0	18,0	15,0	14,0*
Medium	40,0	33,0	28,0	24,0	22,0*
Large	54,0	45,0	38,0	33,0	30,0*

BCW 8	Drum stowing capacity m				
Line Ø mm	16	18	20	22	24
Small	26,0	23,0	20,0	18,0	17,0*
Medium	38,0	34,0	30,0	27,0	25,0*
Large	51,0	45,0	40,0	36,0	34,0*

BCW 16	Drum stowing capacity m					
Line Ø mm	20	22	24	26	28	30
Small	40,0	37,0	34,0	31,0	29,0	28,0
Medium	53,0	49,0	45,0	41,0	39,0	37,0
Large	67,0	61,0	56,0	52,0	49,0	46,0
X Large	80,0	73,0	67,0	62,0	59,0	55,0
XX Large	93,0	85,0	78,0	72,0	69,0	64,0

BCW 24	Drum stowing capacity m				
Line Ø mm	26	28	30	32	34
Small	50,5	46,5	43,5	40,5	38,5
Medium	62,5	58,5	54,5	51,5	48,5
Large	75,5	70,5	65,5	61,5	58,5
X Large	88,5	82,5	76,5	72,5	68,5
XX Large	107,5	99,5	93,5	87,5	83,5

BCW 34	Drum stowing capacity m				
Line Ø mm	30	32	34	36	38
Small	48,0	44,0	42,0	40,0	37,0
Medium	60,0	56,0	53,0	50,0	47,0
Large	72,0	67,0	63,0	60,0	57,0
X Large	84,0	78,0	74,0	70,0	67,0
XX Large	102,0	95,0	90,0	86,0	81,0

Line outlet and extra pulleys

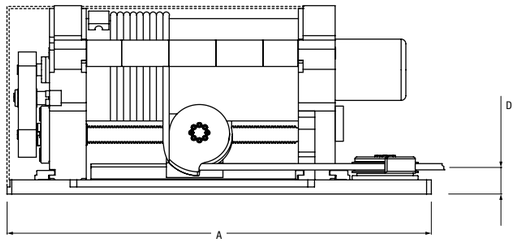

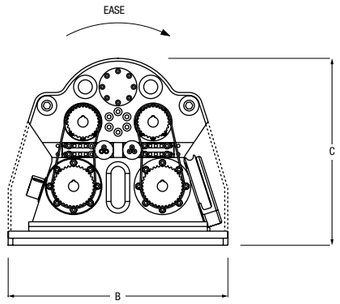

Captive Winch Model			4T	8T	16T	24T	34T
A	Small	mm	850	1020	1330	1555	1675
	Medium	mm	1050	1220	1530	1755	1875
	Large	mm	1250	1420	1730	1955	2075
	X Large	mm	-	-	1930	2155	2275
	XX Large	mm	-	-	2130	2455	2575
B		mm	450	550	680	820	920
C		mm	395	520	620	725	825
D		mm	56	70	77	80	85
Drum Ø		mm	220	300	400	500	550

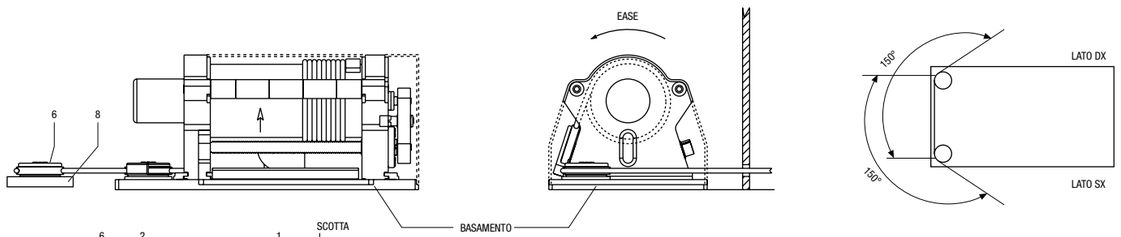

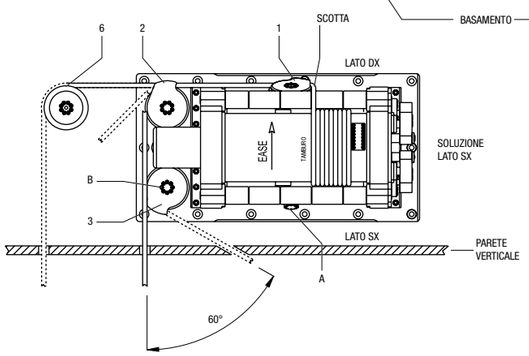

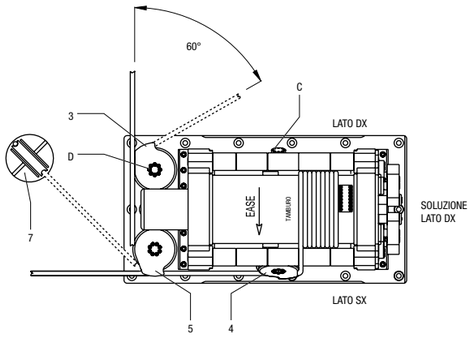

Description	
1	Vertical pulley for LH BCW
2	Horizontal pulley for LH BCW (included)
3	Extra horizontal pulley (optional)
4	Vertical pulley for RH BCW
5	Horizontal pulley for RH BCW (included)
6	Extra horizontal pulley (optional)
7	Extra vertical pulley (optional)
8	Spacer
A	Vertical pulley hub for RH BCW
B	Horizontal pulley housing for RH BCW
C	Vertical pulley hub for LH BCW
D	Horizontal pulley housing for LH BCW

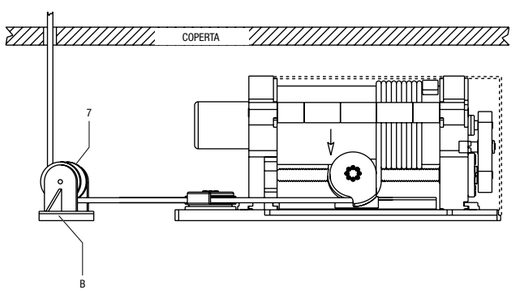

Model		BCW 4	BCW 8	BCW 16	BCW 24	BCW 34
Dynamic pull max	t	4	8	16	24	34
Static load max	t	5	10	20	30	42
Stowing drum Ø	mm	220	300	400	500	550
Line Ø	mm	10-18	16-24	20-32	26-34	30-38
Line speed*	m/min.	*	*	*	*	*
Weight	kg	200 - 300	400 - 500	650 - 850	900 - 1200	1300 - 1700

*to be defined depending on client's requirements.

All hydraulic and electric winches may be equipped (upon specific request) with other motor/reduction gear configurations in order to reach variable speeds up to 40-50 m/min

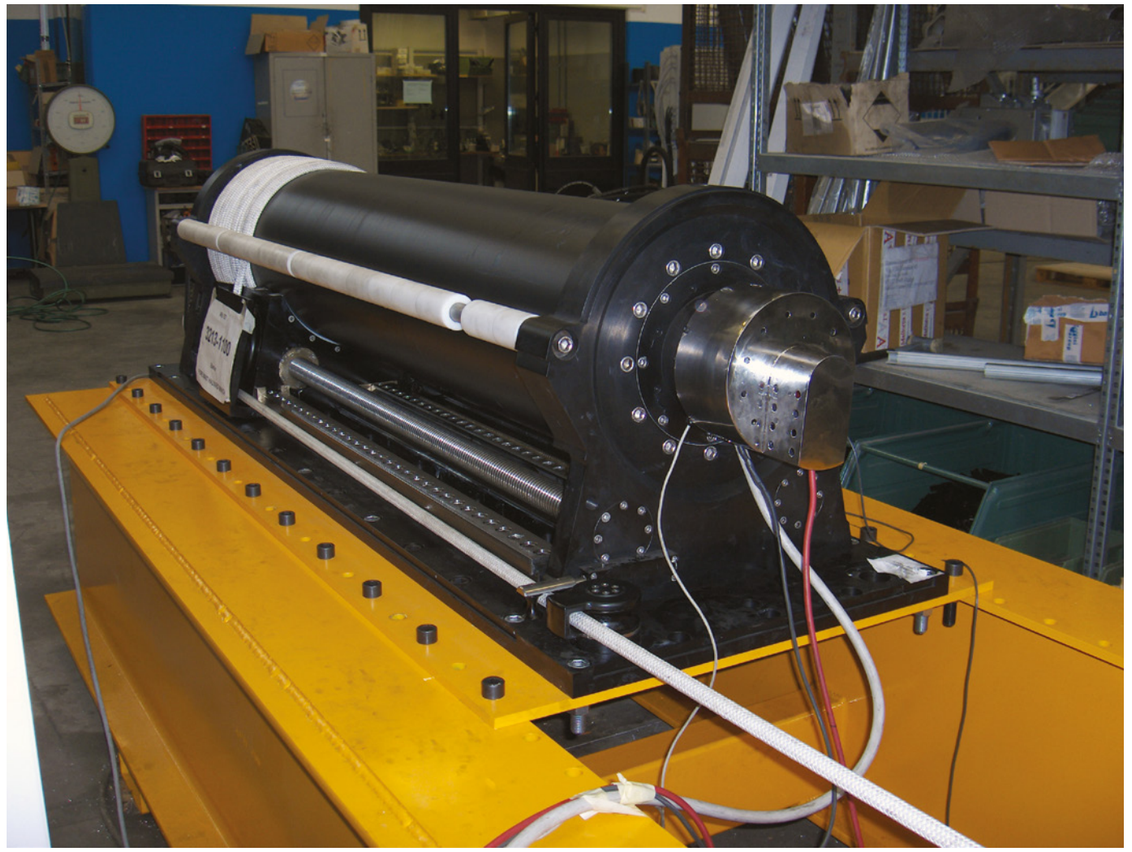

Test Bench Max 250T

Quality

One of the main targets of the company is to ensure complete and constant customer satisfaction, to be reached by continuous Quality improvement. In this context, the need to ensure that all products that are being manufactured are in compliance with the required specifications, led Bamar to the development of a quality management system that has been certified in accordance with the standards ISO 9001 / UNI EN ISO 9001 : 2008 (SGS).

Materials, design and production processes together contribute to maintain a high level of Bamar product quality: in the design phase, we proceed with the creation of a FEA model; then, once the production phase with CNC machines is completed, we first inspect the correspondence of the item made with the original design. Finally, after the final product has been assembled, we carry out tests on the test bench: we check product compliance, no-load operation and with maximum working load.

The entire production cycle, from design to manufacturing and assembly, to final bench tests, is carried out in Italy in our headquarters in Forli.

DEA Quality Check

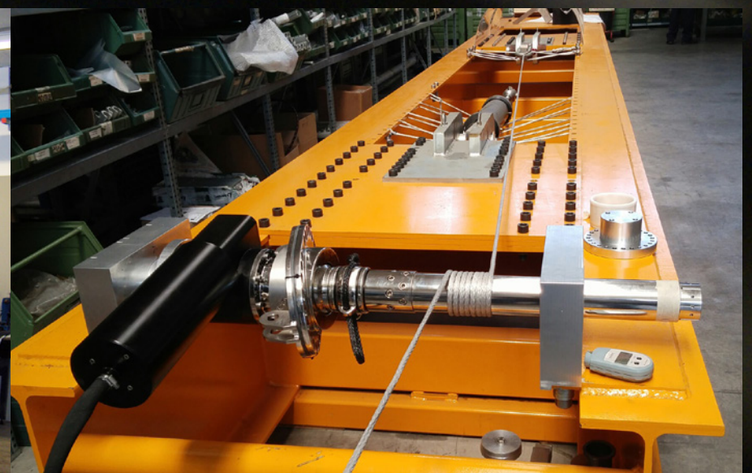

GFSE test

DEA Quality Check

Bamar Facilities

In July 2010 Bamar premises moved to the industrial district of Villa Selva Forlì - Via F.lli Lumière, 45.

The new area of 18.000 square metres also includes the mechanical workshop, in order to guarantee a greater synergy between workshop and warehouse staff, and speed up production process, machining, assembly, test and product delivery.

Bamar workshop boasts a production plant made by vanguard CNC machining centres which allow for high flexibility and production quality.

Our company may thus grant a 360° service, starting from the mere client's requirement and ending up with the finished product.

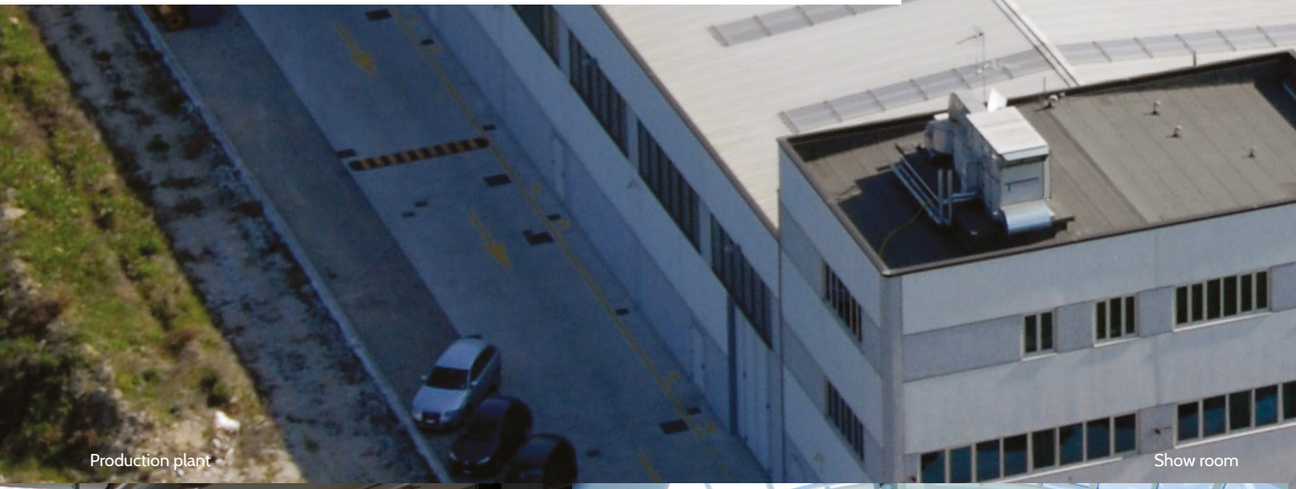

Production plant

Show room

Our premises (Forlì Italia)

GENERAL TERMS AND CONDITIONS FOR SALE

1) Definitions
For the purpose of the present General Tems and Conditions of Sale (hereinaster named “Conditions of Sale”) the following definitions shall apply:i:
-“Soluzioni Meccaniche”: Soluzioni Meccaniche S.R.L. ;
-“Buyer”: any company, body or entity purchasing the Products from Soluzioni Meccaniche;
-“Products”: the goods manufactured, assembled and/or sold by Soluzioni Meccaniche under either Bamar trade mark or other;
-“Offers/Orders”: any proposal for the purchase or offer/order for the Products undersigned and submitted by the Buyer to Soluzioni Meccaniche exclusively by fax or e-mail;
-“Trade Marks”: every and any Trade Mark Soluzioni Meccaniche owns or has a license for;
-“Intellectual Property Rights”: every and any Intellectual and Industrial Property belonging to Soluzioni Meccaniche under Bamar Trade Mark, including, without any limitation, the rights concerning: Patents for inventions, drawings or models, Utility Models, Trade Marks, know-how, technical specifications, data, should these rights be registered or not, as well as any and every submission or registration concerning such rights and any other right or protection form that may be similar or have equivalent effect.
These General Terms and Conditions represent an integral part of all sales contracts for the Products sold by Soluzioni Meccaniche both in Italy and abroad; all offers, all confirmations of order and all supplies of the Products are intended as carried out in compliance with the Conditions listed below, if not differently expressed in writing by Soluzioni Meccaniche.

2) Offer Acceptance or Confirmation of Order
The supply includes the goods and services as specified in either offer or confirmation of order to be carried out following the conditions defined therein. The provisions listed in offers and confirmations of order are to be intended as being integral part of the order itself. Within seven days from the date shown in the documents, the Buyer will therefore have to report in writing any possible discrepancy between what has been demanded and what has been specified in the offer, confirmation of order, possible attachments, or documents enclosed. When this period has elapsed, all clauses listed in either offer , or confirmation of order, shall be deemed as accepted in any and every part.

3) Order Change or Cancellation, Changes to Specifications
Should the Buyer demand for either changes, alterations or cancellation of orders that have already been confirmed and accepted, any cost or expense incurred by Soluzioni Meccaniche until that date shall be reimbursed.

4) Delivery Terms
Delivery terms stated on either offers or confirmations of order are to be intended as merely indicative and not binding for Soluzioni Meccaniche. Therefore, Contracts cannot be cancelled for such reason. The Buyer has to accept that no reimbursement, for any reason or title, can be claimed to Soluzioni Meccaniche should goods not be delivered within the dates indicated and foreseen in the order.

5) Documents
Once the supply has been fulfilled and the Buyer has settled the amount due, Soluzioni Meccaniche will supply either in paper form and/or as digital file via e-mail a basic instruction and maintenance manual concerning the goods supplied.

6) Freight, Risks, and Non-Conformity
Any non-conformity of the Products delivered to the Buyer as to the type and quantity indicated in the Offer/Order and/or Shipping documents must be notified to Soluzioni Meccaniche in writing within seven (7) days from the date of delivery. Should the complaint not be notified within said terms, the delivered Products shall be considered consistent with the Products ordered by the Buyer and no further claim will be allowed.

7) Warranty
The Products supplied are covered by Warranty against material defects and manufacturing faults for a period of two (2) years from the date of their delivery to the Buyer. This is valid for all Products, with the exception of electric components and Custom Products and/or special purpose applications, which are warranted for one (1) year from the date of their delivery. Warranty validity is conditioned upon the Buyers compliance with operational and maintenance instructions specified in the Product’s instruction and maintenance manual. Otherwise, Warranty shall be void. Any and every part that was not directly manufactured by Soluzioni Meccaniche is excluded from the Warranty. Warranty is limited only to the replacement of faulty items due to material defects and/or manufacturing faults. Nonetheless, the existence and nature of such defects will have to be ascertained and declared Soluzioni Meccaniche further to a thorough inspection carried out in their own workshop. To this end, after having notified Soluzioni Meccaniche of the presence of any possible fault or defect in due terms and ways, as per current sales conditions, the Buyer will have to ship the faulty Product to Soluzioni Meccaniche’s factory at the Buyers costs and expenses. Should any intervention be required outside Soluzioni Meccaniche’s premises, all expenses incurred by the personnel will be charged to the Buyer. These will include not only the hours required to reach the place required by the Buyer, but also the hours required to get back to the premises. The kilometric cost of the transfer by car will be charged following ACI lists in force at the time of the intervention. Finally, Soluzioni Meccaniche specifies the Warranty set forth herein is conditioned upon Buyer’s full compliance with payment terms due for the supplies and/or services requested. .
Furthermore, Warranty shall not extend to any Products whose defects or faults are not attributable to a Soluzioni Meccaniche, and depend upon:
• Material defects and/or manufacturing faults which did not exist when the product was delivered (no- original faults);
• Material defects and/or manufacturing faults which appear beyond the Warranty period;
• Material defects and/or manufacturing faults which were not notified to Soluzioni Meccaniche within sixty (60) days after the discovery of the defect;
• alteration or modifications to the product which do not correspond to factory specifications;
• accidental events, misuse, abnormal or incorrect use, abuse or omitted maintenance, incorrect storage;
• installation, wiring, maintenance and/or repair carried out in a wrong way, or replacement of components or accessories with parts that are not compliant with original specifications by Soluzioni Meccaniche;
• use of the product and/or of the boat where the product is fitted on, above allowed and/or recommended limits or loads;
• normal wear or deterioration deriving either from the use of the product, or from its exposure to elements;
• electrical or magnetic influence, natural disasters, any use different from sailing;
• if the warranty intervention is carried out by Soluzioni Meccaniche within a reasonable time, direct and/or indirect damages, such as, by way of example: waste of time, loss of use, disturb, travel expenses, costs due to the supply of any replacement sailing yacht, freight costs, and any possible accidental or indirect damages deriving from the failure to use the boat, for the disturb or the loss of use while the boat is being overhauled or not available, or any other situation which is not specifically covered by the present Warranty;
• costs for the removal, disassembly and re-installation of the product;
• costs or expenses concerning the shipment of the product to Soluzioni Meccaniche and return.
• storage and launching of the boat on which the product was installed, though these activities may be required in order to carry out warranty services.
Furthermore, the time required for the repairs, though under warranty, does not extend in any way the warranty coverage period.
Moreover, Soluzioni Meccaniche does not respond for possible damages deriving from unsuitable modifications, repairs carried out by either the Buyer or third parties without prior authorization from Soluzioni Meccaniche. In any case, Warranty does exclude any compensation for damages due both to wrong use of the equipment, and to failure to adopt adequate safety measures. The present Warranty is supplied by Soluzioni Meccaniche exclusively to the original Buyer of the product and does not extend to third parties. The original Buyer’s rights cannot be transferred to third parties.
Should the product present a defect covered by the Warranty herein, the Buyer will have to notify Soluzioni Meccaniche in writing the presence of vices or defects within seven (7) days from delivery of Products, should these vices or defects be evident, otherwise, within sixty (60) days from the discovery of vices or defects that are either hidden or cannot be detected by a person of average diligence.
Furthermore, in order to obtain either a warranty service, or/and product replacement, the Buyer will have to forward a specific details written request to Soluzioni Meccaniche following the current Warranty Terms and within its period of validity. The request will have to include one’s Name, Address, Phone number, copy of Purchase Invoice, a description of the product application, an explanation of its defect and conditions of use. Should the product examination and the content of the warranty claim prove the defect is not covered by the current warranty, the Buyer will be contacted by either Soluzioni Meccaniche or a BAMAR® dealer who will inform them about the costs involved in the product repair. Should the Buyer accept the quotation, they agree for the product not to be repaired under warranty. In any case, the Buyer may not enforce their warranty rights towards Soluzioni Meccaniche should the price of the Product not have been paid following the conditions and within the terms agreed upon, even if the failure to pay the amount due within the terms and conditions agreed upon refers to Products other than those for which the Buyer intends to make a warranty claim.
In any case, the Buyer’s right to compensation for damages will be limited to a maximum amount equal to the value of the Products which present defects or vices.

8) Intellectual Property Rights
Soluzioni Meccaniche will always remain, unless otherwise agreed upon with the Buyer, the owner of all rights, whatsoever, about the projects and designs developed by its Technical Department. Therefore, any possible production by third parties deriving from such projects will have to be preventively authorized in written by Soluzioni Meccaniche. In case of fraudulent behavior of the Buyer or third parties, Soluzioni Meccaniche, without warning, will protect their own interests in the most appropriate ways.

9) Packaging
The packaging used to pack in the goods to be shipped out to the Buyer will be invoiced to them, applying the real cost borne by Soluzioni Meccaniche only, unless otherwise agreed upon in offers/orders.

10) Payment
Payments will have to be made following terms and ways defined in either offer or order confirmation. We reiterate once more, that partial or total nonpayment of what is due by the Buyer, will not validate the Warranty on goods or services supplied.
The failure to pay within an agreed time will entitle Soluzioni Meccaniche to ask the Buyer for the settlement of interests due, at the rate established by the Legislative Decree n. 231/02, from the expiration date of each single invoice to their actual settlement
The failure to pay or the delay in settlements over thirty days will give Soluzioni Meccaniche the right to suspend delivery of the Products and terminate any single Sale agreed upon. Neither suspension of Products delivery nor termination of Sales will give the Buyer any right to claim damages.
No claim concerning Products and/or their delivery will in any case justify the suspension or delay in payments.

11) Breach of Contract
Should the Buyer fail to abide payment terms and/or any other Contractual condition, Soluzioni Meccaniche will have the right to suspend or postpone the execution of supplies. That is, Soluzioni Meccaniche may consider the contract as terminated subject to possibly act for requesting damages .

12) Applicable Language, Applicable Law, and Jurisdiction
The version to be legally and judicially valid is only and exclusively the one in the Italian language. Therefore, in case of interpretation issues, the Italian version must be referred to, regardless of whether the under-signed Conditions were translated into other languages . All disputes arising out of or related to these Terms and conditions for sale and /or to any sale will be subject to the exclusive jurisdiction of the court of Forlì and only the Italian law will be applicable.

13) Termination Clause
Pursuant to article n.1456 of the Italian Civil Code, Soluzioni Meccaniche may terminate, at any time, by written notice to the Buyer, the single sale in the event of breach of the obligations laid down in Articles 10 (Payment); 8 (Intellectual Property Rights).

14) Change in the Financial Conditions of the Buyer
Soluzioni Meccaniche will be entitled to suspend the fulfillment of the obligations arising from the Sale of the Products, under Article n. 1461 of the Italian Civil Code , in the event that the financial conditions of the Buyer would become liable jeopardize the achievement of the consideration, unless sufficient guarantees are given.

15) Safety
Finally, we highlight that the Basic User and Maintenance Manual which will be supplied by Soluzioni Meccaniche to the Buyer, will report the essential and basic information about the use of the Products supplied intended to prevent unnecessary danger. However, it must be clear to the Buyer that the said manual, in itself, will not be enough for the operator to know all possible dangers the vessel might undergo while sailing or during the maintenance of Products manufactured by Soluzioni Meccaniche. A good technical knowledge of the Product supplied by Soluzioni Meccaniche, joined to observance of safety precautions stated in the manual supplied, matched with a respect of the most basic safety rules, will certainly help in many dangerous situations the Buyer will meet in the use or maintenance of their boat. Objective and interest of Soluzioni Meccaniche is indeed to help target their customers in the use of good and elementary rules, remembering that security must remain, however, the main interest and resposnibility for the Buyer.

In particular, the Buyer declares that they specifically accepted and understood, in accordance with Articles n. 1341 and n. 1342, the following terms and conditions of supply better specified above, and in particular: 1) Definitions . 2) Offer Acceptance or Confirmation of Order. 3) Order Change or Cancellation, Changes to Specifications. 4) Delivery Terms. 6) Freight, Risks and Non-Conformities. 7) Warranty . 8) Intellectual Property Rights. 10) Payment . 11) Breach of Contract. 12) Applicable Language, Applicable Law, and Jurisdiction. 13) Termination Clause. 14) Change in the Financial Conditions of the Buyer. 15) Safety

The present GENERAL TERMS AND CONDITIONS FOR SALE are valid from the date of issue.They may be modified without prior notice, and will be valid from the date of new publication.

The buyer expressly declares to be aware and integrally accept the present GENERAL TERMS AND CONDITIONS FOR SALE of Soluzioni Meccaniche S.R.L.

bamar®

Via F.lli Lumière 45
47122 Forlì (FC), Italy

Phone: +39 0543 463311
Fax: +39 0543 783319

info@bamar.it
bamar.it

Bamar is a Soluzioni Meccaniche brand